MaxPlus® Brushless Rotary Servo Motors

The MaxPlus family is redefining performance, flexibility and reliability, with the industry's broadest range of brushless servo motors – from 1 1/2" to 12" (40 mm to 320 mm). Each unit delivers more performance in a smaller package for less cost. What's more, the reliability of MaxPlus Series motors is becoming legendary in demanding applications. Our rugged construction and industry-leading performance features give you an unbeatable price/performance/cost of ownership combination.

MaxPlus is not just an "off the shelf" line of servo motors. It is a line that offers unparalleled flexibility to achieve precise application requirements. What's more, Compumotor is committed to working with our customers to custom design solutions that meet specific performance and cost criteria.

MaxPlus is the only motor line with such performance specs as more torque to volume, more torque to inertia and more torque per dollar. The full line of MaxPlus brushless servo motors outperforms competitive units in virtually every performance category.

MaxPlus Rotary Motor Features

- High-performance neodymium magnet material
- Resolver and encoder feedback
- Custom windings available
- IP65 sealing for washdown environments standard
- MS connector termination or flying lead termination
- Thermal sensor with windings
- Optional internally mounted brake
- Optional additional feedback transducers
- Optional gear reducers

Custom Designed Servo Motors For Your Specific Application. Call 1-800-358-9070 Today.

Model #	Size (Inches)	Horsepower (HP)	Max Operating Speed (RPM)	Speed at Rated Torque (RPM)	Peak Torque (IN-LBS [Nm])
MPM401ASE	1.5"	0.027	6000	4800	1.5 / 0.17
MPM401BSE	1.5"	0.022	5200	3600	1.6 / 0.18
MPM401CSE	1.5"	0.016	4400	2500	1.7 / 0.19
MPM402ASE	1.5"	0.065	6000	4800	3.5 / 0.39
MPM402BSE	1.5"	0.059	5200	4100	3.5 / 0.39
MPM402CSE	1.5"	0.054	4400	3500	3.6 / 0.41
MPM403ASE	1.5"	0.093	6000	4800	3.7 / 0.41
MPM403BSE	1.5"	0.085	5200	4100	4.7 / 0.53
MPM403CSE	1.5"	0.078	4400	3500	4.9 / 0.55
MPM404ASE	1.5"	0.11	6000	4800	5.3 / 0.59
MPM404BSE	1.5"	0.10	5200	4100	5.4 / 0.61
MPM404CSE	1.5"	0.093	4400	3500	5.6 / 0.63
MPM661ASF	2"	0.15	6000	4000	9.7 / 1.1
MPM661BSF	2"	0.091	3000	2500	9.5 / 1.1
MPM662ASF	2"	0.22	5000	4000	15.1 / 1.7
MPM662BSF	2"	0.16	3000	2500	15.1 / 1.7
MPM663ASF	2"	0.36	5500	4500	22.5 / 2.5
MPM663BSF	2"	0.19	3300	2000	22.5 / 2.5
MPM664ASF	2"	0.48	6000	5000	30.0 / 3.4
MPM664BSF	2"	0.38	3600	3000	30.0 / 3.4
MPM721ASF	2.75"	0.41	6800	5500	17.0 / 1.9
MPM721BSG	2.75"	0.41	6800	5500	17.0 / 1.9
MPM721CSG	2.75"	0.24	4000	3000	17.0 / 1.9
MPM722ASF	2.75"	0.75	7000	5000	34.0 / 3.8
MPM722BSG	2.75"	0.75	7000	5000	34.0 / 3.8
MPM722CSG	2.75"	0.48	4000	3000	34.0 / 3.8
MPM723ASF	2.75"	0.91	6300	4500	45.0 / 5.1
MPM723BSG	2.75"	0.91	6300	4500	45.0 / 5.1
MPM723CSG	2.75"	0.63	4000	3000	45.0 / 5.1
MPM724ASF	2.75"	1.3	6000	5000	56.0 / 6.3
MPM724BSG	2.75"	1.3	6000	5000	56.0 / 6.3
MPM724CSG	2.75"	0.79	4000	3000	56.0 / 6.3
MPM891ASG	3"	0.83	5000	4000	58.8 / 6.6
MPM891BSG	3"	0.55	3000	2400	58.8 / 6.6
MPM892ASG	3"	1.6	5000	4000	109.9 / 12
MPM892BSG	3"	1.0	3000	2400	111.5 / 13
MPM893ASG	3"	2.0	4100	3600	143.2 / 16
MPM893BSG	3"	0.86	2000	1500	137.6 / 16
MPM1141ASG	4"	2.1	4200	3000	189.0 / 21
MPM1141BSG	4"	1.2	2100	1500	189.0 / 21
MPM1141CSJ	4"	2.1	4200	3000	189.0 / 21
MPM1141DSJ	4"	1.2	2100	1500	189.0 / 21
MPM1142ASG	4"	3.3	4200	3000	291.0 / 33
MPM1142BSG	4"	1.8	2100	1500	291.0 / 33
MPM1142CSJ	4"	3.3	4200	3000	291.0 / 33
MPM1142DSJ	4"	1.8	2100	1500	291.0 / 33
MPM1143ASG	4"	4.6	4200	3000	407.0 / 46
MPM1143BSG	4"	2.5	2100	1500	407.0 / 46
MPM1143CSJ	4"	4.6	4200	3000	407.0 / 46
MPM1143DSJ	4"	2.5	2100	1500	407.0 / 46

Model #	Size (Inches)	Horsepower (HP)	Max Operating Speed (RPM)	Speed at Rated Torque (RPM)	Peak Torque (IN-LBS [Nm])
MPM1421ASG	6"	4.4	2700	2400	390.0 / 44
MPM1421BSG	6"	2.9	1750	1500	390.0 / 44
MPM1421CSJ	6"	4.9	3400	2800	390.0 / 44
MPM1421DSJ	6"	2.9	1750	1500	390.0 / 44
MPM1422ASG	6"	6.8	2700	2400	630.0 / 71
MPM1422BSG	6"	4.5	1750	1500	630.0 / 71
MPM1422CSJ	6"	7.6	3400	2800	630.0 / 71
MPM1422DSJ	6"	4.5	1750	1500	630.0 / 71
MPM1423ASG	6"	9.1	2700	2400	840.0 / 95
MPM1423BSG	6"	6.0	1750	1500	840.0 / 95
MPM1423CSJ	6"	9.8	3400	2800	840.0 / 95
MPM1423DSJ	6"	6.0	1750	1500	840.0 / 95
MPM1424ASG	6"	10	2700	2100	1081.0 / 120
MPM1424BSG	6"	7.6	1750	1500	1081.0 / 120
MPM1424CSJ	6"	12	3400	2800	1081.0 / 120
MPM1424DSJ	6"	7.6	1750	1500	1081.0 / 120
MPM1901ASG	8"	13	3000	2400	1200.0 / 140
MPM1901BSG	8"	6.5	1500	1200	1200.0 / 140
MPM1901CSJ	8"	13	3000	2400	1200.0 / 140
MPM1901DSJ	8"	6.5	1500	1200	1200.0 / 140
MPM1902ASG	8"	21	3000	2400	1780.0 / 200
MPM1902BSG	8"	10	1500	1200	1920.0 / 220
MPM1902CSJ	8"	21	3000	2400	1920.0 / 220
MPM1902DSJ	8"	10	1500	1200	1920.0 / 220
MPM1903ASG	8"	29	3000	2400	1780.0 / 200
MPM1903BSG	8"	14	1500	1200	2640.0 / 300
MPM1903CSJ	8"	29	3000	2400	2640.0 / 300
MPM1903DSJ	8"	14	1500	1200	2640.0 / 300
MPM1904ASG	8"	36	3000	2400	1780.0 / 200
MPM1904BSG	8"	18	1500	1200	3276.0 / 370
MPM1904CSJ	8"	36	3000	2400	3276.0 / 370
MPM1904DSJ	8"	18	1500	1200	3276.0 / 370
MPM3201R**-A*	Consult Factory				
MPM3201R**-B*					
MPM3201R**-C*					
MPM3201R**-A*0					
MPM3201R**-B*0					
MPM3201R**-C*0					
MPM3202R**-B*					
MPM3202R**-C*					
MPM3202R**-D*					
MPM3202R**-B*0					
MPM3202R**-C*0					
MPM3202R**-D*0					
MPM3203R**-B*					
MPM3203R**-C*					
MPM3203R**-D*					
MPM3203R**-B*0					
MPM3203R**-C*0					
MPM3203R**-D*0					
MPM3204R**-B*					
MPM3204R**-C*					
MPM3204R**-D*					
MPM3204R**-B*0					
MPM3204R**-C*0					
MPM3204R**-D*0					

MPM	114	1	A	S	G	7	JN	1	N
MAX PLUS MOTOR	FRAME SIZE	STACK LENGTH	WINDING	AMP TYPE	VOLTAGE	MOUNTING	FEEDBACK	TERMINATION	BRAKE OPTION
MPM - STANDARD	40 (1.5”)	1	A	S=SINUSOIDAL	LINE	6=ENGLISH	G=RESOLVER (STANDARD)	1=CONNECTOR (STANDARD)	R=24VSPRING
MPF - FOOD GRADE	66 (2”)	2	B	T=TRAPEZOIDAL	E=54VAC	7=METRIC	J=ENCODER (STANDARD)	2=CONNECTOR (INTERCON)	N=NONE
	72 (2 3/4”)	3	C	X=SPECIAL*	F=110VAC	8=ENG FOOT MOUNT*	M=1000L	3=PIPE THREAD (NPT)	X=SPECIAL*
	89 (3”)	4	D		G=230VAC	9=MET FOOT MOUNT*	N=2000L	4=FLYING LEADS (1.5”)	
	114 (4”)	5*	X=SPECIAL*		J=460VAC	X=SPECIAL*	L=2500L	X=SPECIAL*	
	142 (6”)	6*			X=SPECIAL*		P=3000L		
	190 (8”)						Q=5000L		
							T=6000L		
							X=1024L		
							Y=2048L		
							Z=4096L		
							X=SPECIAL*		

“*” OR “X=SPECIAL*”- Consult Factory
The sample part number shown above will be superceeding MPM1141T2M-AM
**Please reference separate part numbering chart for the 12” motors.

Custom Designed Servo Motors For Your Specific Application. Call 1-800-358-9070 Today.

Resolver

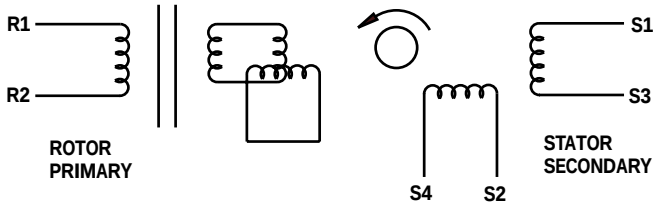

SCHEMATIC DRAWING FOR
BRUSHLESS RESOLVER

Motor Winding

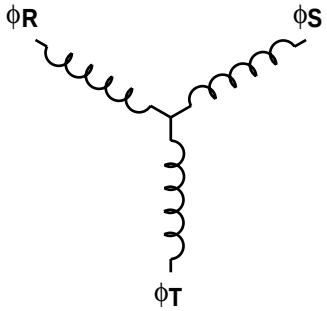

3 PHASE - 4 POLE
1 1/2" - 2" MOTORS

3 PHASE - 6 POLE
2 3/4" - 3" - 4" - 8" MOTORS

Encoder

MOTOR & HALL POSITION CHART

HALL LEADS	BROWN	GRAY	WHITE
MOTOR LEADS	BLACK respect to RED	RED respect to BLUE	BLUE respect to BLACK
VIEW ON THE OSCILLOSCOPE	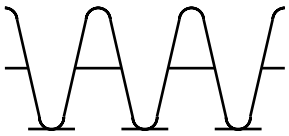	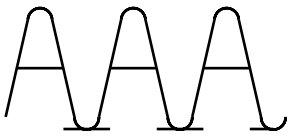	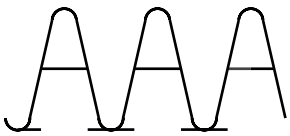

*MOTOR ROTATION CCW (COUNTER CLOCKWISE)
(LOOKING AT THE FACE OF THE MOTOR)

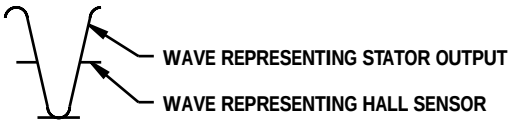

Parker Automation
Parker Hannifin Corporation
Electromechanical Automation Division
parkermotion.com

1 1/2” Frame Brushless Servo Motors

Motor Data (Sine)

Motor Parameters		Units	401ASE****	401BSE****	401CSE****	402ASE****	402BSE****	402CSE****
Horsepower	Hp Rated	Hp	0.027	0.022	0.016	0.065	0.059	0.054
Kilowatts	Watts Rated	Watts	20.0	16.0	12.0	48.0	44.0	40.0
Max. Operating Speed	N Max	RPM	6000	5200	4400	6000	5200	4400
Speed @ Rated Torque	N Rated	RPM	4800	3600	2500	4800	4100	3500
***Continuous Rated Torque @ Rated Speed**		IN-LBS[Nm]	0.36[0.041]	0.38[0.043]	0.41[0.047]	0.85[0.096]	0.90[0.10]	0.98[0.11]
***Continuous Stall Torque**		IN-LBS[Nm]	0.51[0.058]	0.53[0.060]	0.56[0.063]	1.15[0.13]	1.16[0.13]	1.20[0.14]
Continuous Line Current		AMPS(RMS/ϕ)	1.00	0.50	0.36	2.29	1.10	0.79
Peak Torque	Tpk	IN-LBS[Nm]	1.53[0.173]	1.59[0.180]	1.68[0.190]	3.45[0.39]	3.48[0.39]	3.60[0.41]
Peak Current		AMPS(RMS/ϕ)	2.99	1.51	1.07	6.88	3.32	2.35
Max. Theoretical Accel.		RAD/SEC^2	110,000	110,000	120,000	140,000	140,000	140,000
Torque Sensitivity	Kt	IN-LBS/AMP(RMS/ϕ)[Nm/AMP(RMS/ϕ)]	0.51[0.057]	1.05[0.118]	1.56[0.176]	0.51[0.057]	1.05[0.118]	1.53[0.172]
Back EMF (Line to Line)	±10%	Vrms/Krpm	3.2	6.6	9.8	3.2	6.6	9.6
D.C.Resistance (P-P)	±10%	OHMS	5.9	23.0	58.0	2.0	7.7	18.0
Inductance (P-P)	±10%	MILLIHENRIES	1.8	7.3	16.0	0.71	2.8	6.4
Rotor Inertia	Jm	IN-LBS-SEC^2[Kg-M^2]	.000014[.0000016]	.000014[.0000016]	.000014[.0000016]	.000025[.0000028]	.000025[.0000028]	.000025[.0000028]
Static Friction	Tf	IN-LBS[Nm]	0.09[0.010]	0.09[0.010]	0.09[0.010]	0.11[0.012]	0.11[0.012]	0.11[0.012]
Motor Weight		LBS[Kg]	1.0[0.45]	1.0[0.45]	1.0[0.45]	1.2[0.54]	1.2[0.54]	1.2[0.54]
Line Voltage		VAC	54	54	54	54	54	54

Motor Parameters		Units	403ASE****	403BSE****	403CSE****	404ASE****	404BSE****	404CSE****
Horsepower	Hp Rated	Hp	0.093	0.085	0.078	0.110	0.101	0.093
Kilowatts	Watts Rated	Watts	69.0	63.0	58.0	82.0	75.0	69.0
Max. Operating Speed	N Max	RPM	6000	5200	4400	6000	5200	4400
Speed @ Rated Torque	N Rated	RPM	4800	4100	3500	4800	4100	3500
***Continuous Rated Torque @ Rated Speed**		IN-LBS[Nm]	1.22[0.14]	1.30[0.15]	1.40[0.16]	1.45[0.16]	1.55[0.18]	1.67[0.19]
***Continuous Stall Torque**		IN-LBS[Nm]	1.52[0.17]	1.56[0.18]	1.63[0.18]	1.75[0.20]	1.81[0.20]	1.87[0.21]
Continuous Line Current		AMPS(RMS/ϕ)	3.07	1.53	1.06	3.53	1.78	1.22
Peak Torque	Tpk	IN-LBS[Nm]	3.66[0.41]	4.68[0.53]	4.88[0.55]	5.25[0.59]	5.43[0.61]	5.60[0.63]
Peak Current		AMPS(RMS/ϕ)	7.38	4.60	3.18	10.6	5.35	3.65
Max. Theoretical Accel.		RAD/SEC^2	100,000	130,000	130,000	110,000	110,000	120,000
Torque Sensitivity	Kt	IN-LBS/AMP(RMS/ϕ)[Nm/AMP(RMS/ϕ)]	0.49[0.056]	1.02[0.115]	1.54[0.174]	0.49[0.056]	1.02[0.115]	1.54[0.174]
Back EMF (Line to Line)	±10%	Vrms/Krpm	3.1	6.4	9.7	3.1	6.4	9.7
D.C.Resistance (P-P)	±10%	OHMS	1.1	4.4	9.8	0.86	2.9	7.1
Inductance (P-P)	±10%	MILLIHENRIES	0.42	1.8	4.0	0.36	1.3	3.0
Rotor Inertia	Jm	IN-LBS-SEC^2[Kg-M^2]	.000036[.0000041]	.000036[.0000041]	.000036[.0000041]	.000048[.0000054]	.000048[.0000054]	.000048[.0000054]
Static Friction	Tf	IN-LBS[Nm]	0.13[0.015]	0.13[0.015]	0.13[0.015]	0.15[0.017]	0.15[0.017]	0.15[0.017]
Motor Weight		LBS[Kg]	1.4[0.64]	1.4[0.64]	1.4[0.64]	1.6[0.73]	1.6[0.73]	1.6[0.73]
Line Voltage		VAC	54	54	54	54	54	54

*25° C Ambient with a maximum case temperature of 85° C on motor. Motor mounted on a 6” x 6” x 1/4” aluminum heatsink. Thermostat in stator windings will open if winding temperature exceeds 130° C for an approximate 10% headroom in the continuous torque rating before thermostat opens.

Mechanical Notes:

1. Axial Load: 10 LBS. Max.
2. Radial Load: 15 LBS. Max. @ 1” from face
3. Motor sealed to IP65

Custom Designed Servo Motors For Your Specific Application. Call 1-800-358-9070 Today.

Motor Data (Trap)

Motor Parameters		Units	401ATE****	401BTE****	401CTE****	402ATE****	402BTE****	402CTE****
Horsepower	Hp Rated	Hp	0.027	0.022	0.016	0.065	0.059	0.054
Kilowatts	Watts Rated	Watts	20.0	16.0	12.0	48.0	44.0	40.0
Max. Operating Speed	N Max	RPM	6000	5200	4400	6000	5200	4400
Speed @ Rated Torque	N Rated	RPM	4800	3600	2500	4800	4100	3500
*Continuous Rated Torque @ Rated Speed		IN-LBS [Nm]	0.36 [0.041]	0.38 [0.043]	0.41 [0.047]	0.85 [0.096]	0.90 [0.10]	0.98 [0.11]
*Continuous Stall Torque		IN-LBS [Nm]	0.51 [0.058]	0.53 [0.060]	0.56 [0.063]	1.15 [0.13]	1.16 [0.13]	1.20 [0.14]
Continuous Line Current		AMPS	1.41	0.71	0.51	3.24	1.56	1.11
Peak Torque	Tpk	IN-LBS [Nm]	1.53 [0.173]	1.59 [0.180]	1.68 [0.190]	3.45 [0.39]	3.48 [0.39]	3.60 [0.41]
Peak Current		AMPS	4.23	2.14	1.52	9.73	4.69	3.32
Max. Theoretical Accel.		RAD/SEC^2	110,000	110,000	120,000	140,000	140,000	140,000
Torque Sensitivity	Kt	IN-LBS/AMP [Nm/AMP]	0.36 [0.041]	0.74 [0.084]	1.10 [0.124]	0.35 [0.040]	0.74 [0.084]	1.08 [0.122]
Back EMF (Line to Line)	±10%	Vrms/Krpm	3.2	6.6	9.8	3.2	6.6	9.6
D.C. Resistance (P-P)	±10%	OHMS	5.9	23.0	58.0	2.0	7.7	18.0
Inductance (P-P)	±10%	MILLIHENRIES	1.8	7.3	16.0	0.71	2.8	6.4
Rotor Inertia	Jm	IN-LBS-SEC^2 [Kg-M^2]	.000014 [.0000016]	.000014 [.0000016]	.000014 [.0000016]	.000025 [.0000028]	.000025 [.0000028]	.000025 [.0000028]
Static Friction	Tf	IN-LBS [Nm]	0.09 [0.010]	0.09 [0.010]	0.09 [0.010]	0.11 [0.012]	0.11 [0.012]	0.11 [0.012]
Motor Weight		LBS [Kg]	1.0 [0.45]	1.0 [0.45]	1.0 [0.45]	1.2 [0.54]	1.2 [0.54]	1.2 [0.54]
Line Voltage		VAC	54	54	54	54	54	54

Motor Parameters		Units	403ATE****	403BTE****	403CTE****	404ATE****	404BTE****	404CTE****
Horsepower	Hp Rated	Hp	0.093	0.085	0.078	0.110	0.101	0.093
Kilowatts	Watts Rated	Watts	69.0	63.0	58.0	82.0	75.0	69.0
Max. Operating Speed	N Max	RPM	6000	5200	4400	6000	5200	4400
Speed @ Rated Torque	N Rated	RPM	4800	4100	3500	4800	4100	3500
*Continuous Rated Torque @ Rated Speed		IN-LBS [Nm]	1.22 [0.14]	1.30 [0.15]	1.40 [0.16]	1.45 [0.16]	1.55 [0.18]	1.67 [0.19]
*Continuous Stall Torque		IN-LBS [Nm]	1.52 [0.17]	1.56 [0.18]	1.63 [0.18]	1.75 [0.20]	1.81 [0.20]	1.87 [0.21]
Continuous Line Current		AMP S	4.34	2.17	1.50	4.99	2.52	1.72
Peak Torque	Tpk	IN-LBS [Nm]	3.66 [0.41]	4.68 [0.53]	4.88 [0.55]	5.25 [0.59]	5.43 [0.61]	5.60 [0.63]
Peak Current		AMPS	10.44	6.51	4.49	15.0	7.56	5.16
Max. Theoretical Accel.		RAD/SEC^2	100,000	130,000	130,000	110,000	110,000	120,000
Torque Sensitivity	Kt	IN-LBS/AMP[Nm/AMP]	0.35 [0.039]	0.72 [0.081]	1.09 [0.123]	0.35 [0.040]	0.72 [0.081]	1.09 [0.123]
Back EMF (Line to Line)	±10%	Vrms/Krpm	3.1	6.4	9.7	3.1	6.4	9.7
D.C. Resistance (P-P)	±10%	OHMS	1.1	4.4	9.8	0.86	2.9	7.1
Inductance (P-P)	±10%	MILLIHENRIES	0.42	1.8	4.0	0.36	1.3	3.0
Rotor Inertia	Jm	IN-LBS-SEC^2 [Kg-M^2]	.000036 [.0000041]	.000036 [.0000041]	.000036 [.0000041]	.000048 [.0000054]	.000048 [.0000054]	.000048 [.0000054]
Static Friction	Tf	IN-LBS [Nm]	0.13 [0.015]	0.13 [0.015]	0.13 [0.015]	0.15 [0.017]	0.15 [0.017]	0.15 [0.017]
Motor Weight		LBS [Kg]	1.4 [0.64]	1.4 [0.64]	1.4 [0.64]	1.6 [0.73]	1.6 [0.73]	1.6 [0.73]
Line Voltage		VAC	54	54	54	54	54	54

*25° C Ambient with a maximum case temperature of 85° C on motor. Motor mounted on a 6" x 6" x 1/4" aluminum heatsink. Thermostat in stator windings will open if winding temperature exceeds 130° C for an approximate 10% headroom in the continuous torque rating before thermostat opens.

Mechanical Notes:

1. Axial Load: 10 LBS.Max.
2. Radial Load: 15 LBS.Max. @ 1" from face
3. Motor sealed to IP65

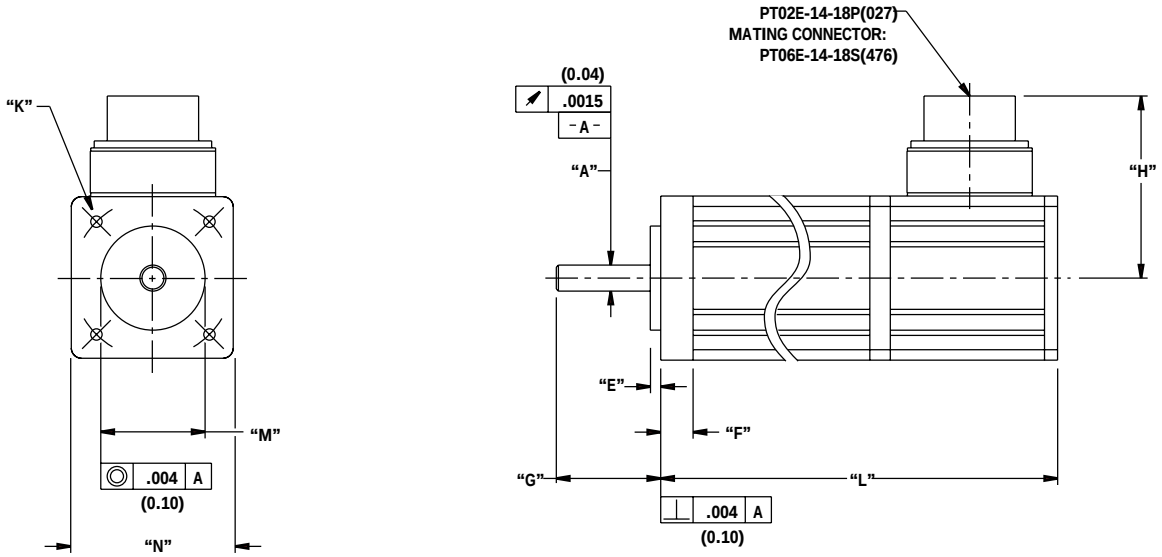

1 1/2" (40) English and Metric Connectorized Termination-Option 1 Motors

Model	"A"	"D"	"F"	"G"	"H"
MPM401***6***	ø .2500(6.350) .2495(6.337)	.10(2.5)	31(7.9)	1.02(25.9) .98(24.9)	1.76(44.7) Max
MPM401***7***	ø 6.000(.2362) 5.992(.2359)	2.5(.10)	7.9 (.31)	25.4(1.00) 24.4(.96)	44.7(1.76) Max
MPM402***6***	ø .2500(6.350) .2495(6.337)	.10(2.5)	31(7.9)	1.02(25.9) .98(24.9)	1.76(44.7) Max
MPM402***7***	ø 6.000(.2362) 5.992(.2359)	2.5(.10)	7.9 (.31)	25.4(1.00) 24.4(.96)	44.7(1.76) Max
MPM403***6***	ø .2500(6.350) .2495(6.337)	.10(2.5)	31(7.9)	1.02(25.9) .98(24.9)	1.76(44.7) Max
MPM403***7***	ø 6.000(.2362) 5.992(.2359)	2.5(.10)	7.9 (.31)	25.4(1.00) 24.4(.96)	44.7(1.76) Max
MPM404***6***	ø .2500(6.350) .2495(6.337)	.10(2.5)	31(7.9)	1.02(25.9) .98(24.9)	1.76(44.7) Max
MPM404***7***	ø 6.000(.2362) 5.992(.2359)	2.5(.10)	7.9 (.31)	25.4(1.00) 24.4(.96)	44.7(1.76) Max

Model	"K"	"L"	"M"	"N"
MPM401***6***	#6-32UNC-2B↧ 250(6.35)(4)EQ SPD AS SHOWN ON Ø 1.531(38.89) B.C.	3.83(97.3) Max	ø 1.000(25.40) .998(25.35)	□ 1.575(40.00)
MPM401***7***	M3 X .5↧ 6.35(.250)(4)EQ SPD AS SHOWN ON Ø 46.00(1.811) B.C.	97.3(3.83) Max	ø 30.00(1.181) 29.79(1.173)	□ 40.00(1.575)
MPM402***6***	#6-32UNC-2B↧ 250(6.35)(4)EQ SPD AS SHOWN ON Ø 1.531(38.89) B.C.	4.33(110.0) Max	ø 1.000(25.40) .998(25.35)	□ 1.575(40.00)
MPM402***7***	M3 X .5↧ 6.35(.250)(4)EQ SPD AS SHOWN ON Ø 46.00(1.811) B.C.	110.0(4.33) Max	ø 30.00(1.181) 29.79(1.173)	□ 40.00(1.575)
MPM403***6***	#6-32UNC-2B↧ 250(6.35)(4)EQ SPD AS SHOWN ON Ø 1.531(38.89) B.C.	4.83(122.7) Max	ø 1.000(25.40) .998(25.35)	□ 1.575(40.00)
MPM403***7***	M3 X .5↧ 6.35(.250)(4)EQ SPD AS SHOWN ON Ø 46.00(1.811) B.C.	122.7(4.83) Max	ø 30.00(1.181) 29.79(1.173)	□ 40.00(1.575)
MPM404***6***	#6-32UNC-2B↧ 250(6.35)(4)EQ SPD AS SHOWN ON Ø 1.531(38.89) B.C.	5.33(135.4) Max	ø 1.000(25.40) .998(25.35)	□ 1.575(40.00)
MPM404***7***	M3 X .5↧ 6.35(.250)(4)EQ SPD AS SHOWN ON Ø 46.00(1.811) B.C.	135.4(5.33) Max	ø 30.00(1.181) 29.79(1.173)	□ 40.00(1.575)

English = 6 Units: in (mm)
Metric = 7 Units: in (mm)

Custom Designed Servo Motors For Your Specific Application. Call 1-800-358-9070 Today.

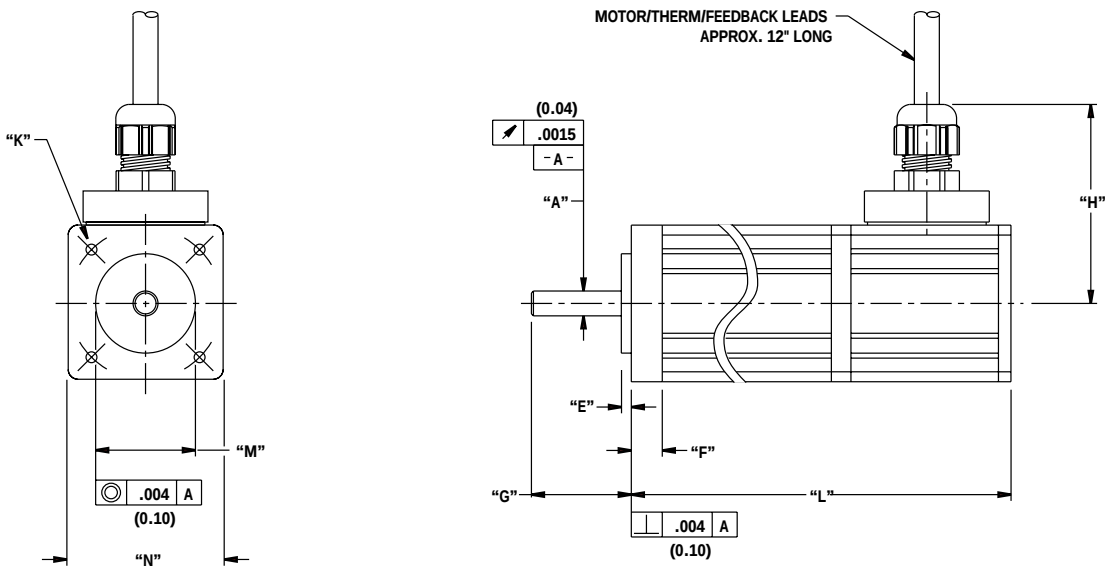

1 1/2" (40) English and Metric Flying Leads Termination-Option 4 Motors

Model	"A"	"E"	"F"	"G"	"H"
MPM401*6***	ø .2500 (6.350) .2495 (6.337)	.10 (2.5)	31 (7.9)	1.02 (25.9) .98 (24.9)	2.00 (58.0) Max
MPM401*7***	ø 6.000 (.2362) 5.992 (.2359)	2.5 (.10)	7.9 (.31)	25.4 (1.00) 24.4 (.96)	50.8 (2.00) Max
MPM402*6***	ø .2500 (6.350) .2495 (6.337)	.10 (2.5)	31 (7.9)	1.02 (25.9) .98 (24.9)	2.00 (58.0) Max
MPM402*7***	ø 6.000 (.2362) 5.992 (.2359)	2.5 (.10)	7.9 (.31)	25.4 (1.00) 24.4 (.96)	50.8 (2.00) Max
MPM403*6***	ø .2500 (6.350) .2495 (6.337)	.10 (2.5)	31 (7.9)	1.02 (25.9) .98 (24.9)	2.00 (58.0) Max
MPM403*7***	ø 6.000 (.2362) 5.992 (.2359)	2.5 (.10)	7.9 (.31)	25.4 (1.00) 24.4 (.96)	50.8 (2.00) Max
MPM404*6***	ø .2500 (6.350) .2495 (6.337)	.10 (2.5)	31 (7.9)	1.02 (25.9) .98 (24.9)	2.00 (58.0) Max
MPM404*7***	ø 6.000 (.2362) 5.992 (.2359)	2.5 (.10)	7.9 (.31)	25.4 (1.00) 24.4 (.96)	50.8 (2.00) Max

Model	"K"	"L"	"M"	"N"
MPM401*6***	#6-32UNC-2B ↧ 250 (6.35) (4) EQ SPD AS SHOWN ON Ø 1.531 (38.89) B.C.	3.83 (97.3) Max	ø 1.000 (25.40) .998 (25.35)	□ 1.575 (40.00)
MPM401*7***	M3 X .5 ↧ 6.35 (.250) (4) EQ SPD AS SHOWN ON Ø 46.00 (1.811) B.C.	97.3 (3.83) Max	ø 30.00 (1.181) 29.79 (1.173)	□ 40.00 (1.575)
MPM402*6***	#6-32UNC-2B ↧ 250 (6.35) (4) EQ SPD AS SHOWN ON Ø 1.531 (38.89) B.C.	4.33 (110.0) Max	ø 1.000 (25.40) .998 (25.35)	□ 1.575 (40.00)
MPM402*7***	M3 X .5 ↧ 6.35 (.250) (4) EQ SPD AS SHOWN ON Ø 46.00 (1.811) B.C.	110.0 (4.33) Max	ø 30.00 (1.181) 29.79 (1.173)	□ 40.00 (1.575)
MPM403*6***	#6-32UNC-2B ↧ 250 (6.35) (4) EQ SPD AS SHOWN ON Ø 1.531 (38.89) B.C.	4.83 (122.7) Max	ø 1.000 (25.40) .998 (25.35)	□ 1.575 (40.00)
MPM403*7***	M3 X .5 ↧ 6.35 (.250) (4) EQ SPD AS SHOWN ON Ø 46.00 (1.811) B.C.	122.7 (4.83) Max	ø 30.00 (1.181) 29.79 (1.173)	□ 40.00 (1.575)
MPM404*6***	#6-32UNC-2B ↧ 250 (6.35) (4) EQ SPD AS SHOWN ON Ø 1.531 (38.89) B.C.	5.33 (135.4) Max	ø 1.000 (25.40) .998 (25.35)	□ 1.575 (40.00)
MPM404*7***	M3 X .5 ↧ 6.35 (.250) (4) EQ SPD AS SHOWN ON Ø 46.00 (1.811) B.C.	135.4 (5.33) Max	ø 30.00 (1.181) 29.79 (1.173)	□ 40.00 (1.575)

English = 6 Units: in (mm)
Metric = 7 Units: in (mm)

1 1/2" Motor with Resolver Feedback

Option 1

Motor Therm Resolver Connector 270-00024 (PT02E-14-18P(027))	
Pin	**Function**
A	ϕR
B	ϕS
C	ϕT
D	PE GND
U	THERM
N	THERM
H	SIN
G	COS GND
S	COS
F	SIN GND
R	REF GND
E	REF
J	RES SHLD
K	-
L	-
M	-
P	-
T	-

Option 2 and 3-Not Available
Brake Option-Consult Factory
Encoder Option-Consult Factory

Option 4

Connection Chart	
Function	**Wire Color**
ϕR	RED
ϕS	BLACK
ϕT	BLUE
PE GND	GRN/YEL
THERM	WHITE
THERM	WHITE
SIN	YELLOW
COS GND	BLACK
COS	RED
SIN GND	BLUE
REF GND	YEL/WHT
REF	RED/WHT
RES SHLD	GRN/YEL

Custom Designed Servo Motors For Your Specific Application. Call 1-800-358-9070 Today.

2” Frame Brushless Servo Motors

Motor Data (Sine)

Motor Parameters		Units	661ASF****	661BSF****	662ASF****	662BSF****
Horsepower	Hp Rated	Hp	.15	.09	.22	. 16
Kilowatts	KW Rated	KW	.11	.07	.16	. 12
Max. Operating Speed	N Max	RPM	6000	3000	5000	3000
Speed @ Rated Torque	N Rated	RPM	4000	2500	4000	2500
***Continuous Rated Torque @ Rated Speed**		IN-LBS[Nm]	2.3[.26]	2.3[.26]	3.4[.38]	4.0[.45]
***Continuous Stall Torque**		IN-LBS[Nm]	2.6[.29]	2.6[.29]	5.0[.56]	5.0[.56]
Continuous Line Current		AMPS(RMS/ϕ)	2.1	1.1	1.8	1.1
Peak Torque	Tpk	IN-LBS[Nm]	7.8[0.9]	7.8[0.9]	15.1[1.7]	15.1[1.7]
Peak Current		AMPS(RMS/ϕ)	6.9	3.5	5.4	3.3
Max. Theoretical Accel.		RAD/SEC^2	118.182	118.182	155,670	155,670
Torque Sensitivity	Kt	IN-LBS/AMP(RMS/ϕ)[Nm/AMP(RMS/ϕ)]	1.5[.16]	2.8[.32]	2.8[.32]	4.5[.51]
Back EMF (Line to Line)	±10%	Vrms/Krpm	9.2	18.0	17.8	28.3
D.C.Resistance (P-P)	±10%	OHMS	6.9	31.9	8.4	18.5
Inductance (P-P)	±10%	MILLIHENRIES	7.7	29.4	11.6	26.4
Rotor Inertia	Jm	IN-LBS-SEC^2[Kg-M^2]	.000066[.0000075]	.000066[.0000075]	.000097[.0000109]	.000097[.0000109]
Static Friction	Tf	IN-LBS[Nm]	.35[.04]	.35[.04]	0.5[0.06]	0.5[0.06]
Motor Weight		LBS[Kg]	2.2[1.0]	2.2[1.0]	2.8[1.3]	2.8[1.3]
Line Voltage		VAC	110	110	110	110

Motor Parameters		Units	663ASF****	663BSF****	664ASF****	664BSF****
Horsepower	Hp Rated	Hp	.36	.19	.48	.34
Kilowatts	KW Rated	KW	.27	.14	.35	.26
Max. Operating Speed	N Max	RPM	5500	3300	6000	3600
Speed @ Rated Torque	N Rated	RPM	4500	2000	5000	3000
***Continuous Rated Torque @ Rated Speed**		IN-LBS[Nm]	5.0[.56]	6.0[.68]	6.0[0.68]	8.0[.90]
***Continuous Stall Torque**		IN-LBS[Nm]	7.5[.85]	7.5[.85]	10.0[1.13]	10.0[1.13]
Continuous Line Current		AMPS(RMS/ϕ)	2.7	1.4	3.5	2.2
Peak Torque	Tpk	IN-LBS[Nm]	22.5[2.54]	22.5[2.54]	30.0[3.4]	30.0[3.4]
Peak Current		AMPS(RMS/ϕ)	8.0	4.9	10.6	6.6
Max. Theoretical Accel.		RAD/SEC^2	175,781	175,781	188,679	188,679
Torque Sensitivity	Kt	IN-LBS/AMP(RMS/ϕ)[Nm/AMP(RMS/ϕ)]	2.8[.32]	4.5[.51]	2.8[.32]	4.5[.51]
Back EMF (Line to Line)	±10%	Vrms/Krpm	17.8	28.3	17.8	28.3
D.C.Resistance (P-P)	±10%	OHMS	5.2	14.4	3.1	7.0
Inductance (P-P)	±10%	MILLIHENRIES	7.0	17.9	5.1	11.0
Rotor Inertia	Jm	IN-LBS-SEC^2[Kg-M^2]	.000128[.0000145]	.000128[.0000145]	.000159[.0000179]	.000159[.0000179]
Static Friction	Tf	IN-LBS[Nm]	.65[.073]	.65[.073]	0.8[0.09]	0.8[0.09]
Motor Weight		LBS[Kg]	3.2[1.5]	3.2[1.5]	3.8[1.7]	3.8[1.7]
Line Voltage		VAC	110	110	110	110

Brake Info:

Min. Holding Torque: 10 IN-LBS
Input Voltage: 24VDC
Current: .21 AMPS
Inertia: .000025 IN-LB-SEC^2
Weight Adder: .8 LBS

*25° C Ambient with a maximum case temperature of 100° C on motor. Motor mounted on a 10” x 10” x 1/4” aluminum heatsink. Thermostat in stator windings will open if winding temperature exceeds 155° C for an approximate +10% headroom in the continuous torque rating before thermostat opens.

Mechanical Notes:

1. Axial Load: 15 LBS. Max.
2. Radial Load: 20 LBS. Max. @ 1” from face
3. Motor sealed to IP65

Please note: MPM66*BTG**** are available

Motor Data (Trap)

Motor Parameters		Units	661ATF****	661BTF****	662ATF****	662BTF****
Horsepower	Hp Rated	Hp	.15	.09	.22	.16
Kilowatts	KW Rated	KW	.11	.07	.16	.12
Max. Operating Speed	N Max	RPM	6000	3000	5000	3000
Speed @ Rated Torque	N Rated	RPM	4000	2500	4000	2500
***Continuous Rated Torque @ Rated Speed**		IN-LBS[Nm]	2.3[.26]	2.3[.26]	3.4[.38]	4.0[.45]
***Continuous Stall Torque**		IN-LBS[Nm]	2.6[.29]	2.6[.29]	5.0[.56]	5.0[.56]
Continuous Line Current		AMPS	3.0	1.53	2.5	1.6
Peak Torque	Tpk	IN-LBS[Nm]	7.8[0.9]	7.8[0.9]	15.1[1.7]	15.1[1.7]
Peak Current		AMPS	9.7	5.0	7.6	4.7
Max. Theoretical Accel.		RAD/SEC^2	118,182	118,182	155,670	155,670
Torque Sensitivity	Kt	IN-LBS/AMP[Nm/AMP]	1.03[.12]	2.0[.23]	2.0[.23]	3.2[.36]
Back EMF (Line to Line)	±10%	Vrms/Krpm	9.2	18.0	17.8	28.3
D.C.Resistance (P-P)	±10%	OHMS	6.9	31.9	8.4	18.5
Inductance (P-P)	±10%	MILLIHENRIES	7.7	29.4	11.6	26.4
Rotor Inertia	Jm	IN-LBS-SEC^2[Kg-M^2]	.000066[.0000075]	.000066[.0000075]	.000097[.0000109]	.000097[.0000109]
Static Friction	Tf	IN-LBS[Nm]	.35[.04]	.35[.04]	0.5[.06]	0.5[.06]
Motor Weight		LBS[Kg]	2.2[1.0]	2.2[1.0]	2.8[1.3]	2.8[1.3]
Line Voltage		VAC	110	110	110	110

Motor Parameters		Units	663ATF****	663BTF****	664ATF****	664BTF****
Horsepower	Hp Rated	Hp	.36	.19	.48	.34
Kilowatts	KW Rated	KW	.27	.14	.35	.26
Max. Operating Speed	N Max	RPM	5500	3300	6000	3600
Speed @ Rated Torque	N Rated	RPM	4500	2000	5000	2700
***Continuous Rated Torque @ Rated Speed**		IN-LBS[Nm]	5.0[.56]	6.0[.68]	6.0[.68]	8.0[.90]
***Continuous Stall Torque**		IN-LBS[Nm]	7.5[.85]	7.5[.85]	10.0[1.13]	10.0[1.13]
Continuous Line Current		AMPS	3.8	2.0	5.0	3.1
Peak Torque	Tpk	IN-LBS[Nm]	22.5[2.54]	22.5[2.54]	30.0[3.4]	30.0[3.4]
Peak Current		AMPS	11.3	7.0	15.0	9.4
Max. Theoretical Accel.		RAD/SEC^2	175,781	175,781	188,679	188,679
Torque Sensitivity	Kt	IN-LBS/AMP[Nm/AMP]	2.0[.23]	3.2[.36]	2.0[.23]	3.2[0.36]
Back EMF (Line to Line)	±10%	Vrms/Krpm	17.8	28.3	17.8	28.3
D.C.Resistance (P-P)	±10%	OHMS	5.2	14.4	3.1	7.0
Inductance (P-P)	±10%	MILLIHENRIES	7.0	17.9	5.1	11.0
Rotor Inertia	Jm	IN-LBS-SEC^2[Kg-M^2]	.000128[.0000145]	.000128[.0000145]	.000159[.0000179]	.000159[.0000179]
Static Friction	Tf	IN-LBS[Nm]	.65[.073]	.65[.073]	0.8[.09]	0.8[0.09]
Motor Weight		LBS[Kg]	3.2[1.5]	3.2[1.5]	3.8[1.7]	3.8[1.7]
Line Voltage		VAC	110	110	110	110

Brake Info:

Min. Holding Torque: 10 IN-LBS
Input Voltage: 24VDC
Current : .21 AMPS
Inertia: .000025 IN-LB-SEC^2
Weight Adder: .8 LBS

*25° C Ambient with a maximum case temperature of 100° C on motor. Motor mounted on a 10" x 10" x 1/4" aluminum heatsink. Thermostat in stator windings will open if winding temperature exceeds 155° C for an approximate +10% headroom in the continuous torque rating before thermostat opens.

Mechanical Notes:

1. Axial Load: 15 LBS. Max.
2. Radial Load: 20 LBS. Max. @ 1" from face
3. Motor sealed to IP65

Please note: MPM66*BTG****are available

Custom Designed Servo Motors For Your Specific Application. Call 1-800-358-9070 Today.

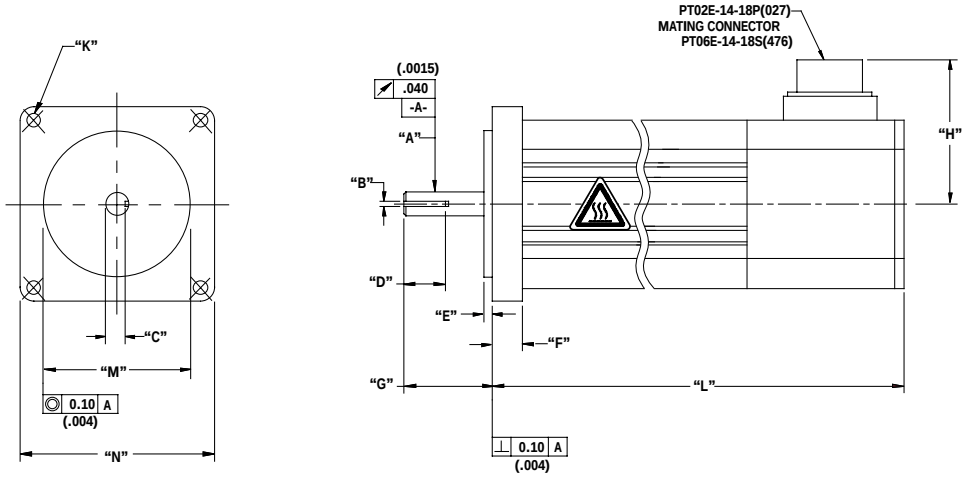

2" (66) English and Metric Connectorized Termination-Option 1 Motors

Model	"A"	"B"	"C"	"D"	"E"	"F"
MPM662*6***	ø 2500 (6.350) 2495 (6.337)	NA	NA	NA	.06 (1.6)	.46 (11.7)
MPM662*7***	ø 8.000 (.3150) 7.991 (.3146)	2.000 (.0787) 1.971 (.0776)	6.68 (.263)	14.00 (.551) Min	3.0 (.12)	10.2 (.40)
MPM664*6***	ø 2500 (6.350) 2495 (6.337)	NA	NA	NA	.06 (1.6)	.46 (11.7)
MPM664*7***	ø 8.000 (.3150) 7.991 (.3146)	2.000 (.0787) 1.971 (.0776)	6.68 (.263)	14.00 (.551) Min	3.0 (.12)	10.2 (.40)

Model	"G"	"H"	"K"	"L"	"L" w/ Brake	"M"	"N"
MPM662*6***	.83 (21.1) .79 (20.1)	2.0 (51) Max	205 (5.21) THRU (4) EQ SPD AS SHOWN ON Ø2.625 (66.68) B.C.	5.55 (140.9) Max	6.75 (171.5)	ø 1.502 (38.15) 1.498 (38.05)	□ 2.25 (57.2)
MPM662*7***	30.5 (1.20) 29.5 (1.16)	51 (2.0) Max	Ø5.00 (.197) THRU (4) EQ SPD AS SHOWN ON Ø80.00 (3.150) B.C.	139.5 (5.49) Max	169.9 (6.69)	ø 50.000 (1.9685) 49.975 (1.9675)	□ 66.00 (2.598)
MPM664*6***	.83 (21.1) .79 (20.1)	2.0 (51) Max	.205 (5.21) THRU (4) EQ SPD AS SHOWN ON Ø2.625 (66.68) B.C.	6.75 (171.5) Max	7.95 (201.9)	ø 1.502 (38.15) 1.498 (38.05)	□ 2.25 (57.2)
MPM664*7***	30.5 (1.20) 29.5 (1.16)	51 (2.0) Max	Ø5.00 (.197) THRU (4) EQ SPD AS SHOWN ON Ø80.00 (3.150) B.C.	169.6 (6.69) Max	200.4 (7.89)	ø 50.000 (1.9685) 49.975 (1.9675)	□ 66.00 (2.598)

English = 6 (NEMA 23) Units: in (mm)
Metric = 7 Units: mm (in)

2" Motor with Resolver Feedback

Option 1

Motor Connector 270-00024 (PT02E-14-18P(027))

Pin	Function
A	ϕR
B	ϕS
C	ϕT
D	PE GND
U	THERM
N	THERM
H	SIN
G	COS GND
S	COS
F	SIN GND
R	REF GND
E	REF
J	RES SHLD
*K	BRK (+)
*L	BRK (–)
*M	BRK SHLD
P	-
T	-

*USE ONLY WITH BRAKE OPTION

Option 2

Motor Connector 270-00256(BEGA089NN0000009000)

Pin	Function
1	ϕR (U1)
2	PE GND
3	ϕT (W1)
4	ϕS (V1)
*A	BRK (+)
*B	BRK (–)
C	THERM
D	THERM

*USE ONLY WITH BRAKE OPTION

Resolver Connector 270-00257(AEGA052NN00000013000)

Pin	Function
1	-
2	REF (R1)
3	REF GND (R2)
4	COS GND (S1)
5	COS (S3)
6	SIN (S2)
7	SIN GND (S4)
8	-
9	-
10	-
11	-
12	-

Custom Designed Servo Motors For Your Specific Application. Call 1-800-358-9070 Today.

2" Motor with Encoder Feedback

Option 1

Motor Brake Encoder Connector 270-00219 (PT02E-16-23P(027))

Pin	Function
A	ϕR
B	ϕS
C	ϕT
D	PE GND
T	GND
E	+5VDC
F	CH A
U	CH A\
G	CH B
V	CH B\
H	CH Z
W	CH Z\
J	CH U
K	CH U\
X	CH V
L	CH V\
Y	CH W
M	CH W\
N	GND/CABLE
S	THERM
R	THERM
*P	BRK (+)
*Z	BRK (–)

*USE ONLY WITH BRAKE OPTION

Option 2

Motor Connector 270-00256 (BEGA089NN0000009000)

Pin	Function
1	ϕR
2	ϕS
3	ϕT
4	ϕT
*A	BRK (+)
*B	BRK (–)
C	THERM
D	THERM

*USE ONLY WITH BRAKE OPTION

Encoder Connector 270-00257 (AEGA052NN00000013000)

Pin	Function
1	GND (0V)
2	CH A\ (A)
3	CH A (A\)
4	CH B (B)
5	CH B\ (B\)
6	CH Z (Z)
7	CH Z\ (Z\)
8	+5V (+5V)
9	-
10	CH U (RLGU)
11	CH V (RLGV)
12	CH W (RLGW)

2 3/4” Frame Brushless Servo Motors

Motor Data (Sine)

Motor Parameters		Units	721ASF****	721BSG****	721CSG****	722ASF****	722BSG****	722CSG****
Horsepower	Hp Rated	Hp	0.41	0.41	0.24	0.74	0.74	0.47
Kilowatts	KW Rated	KW	0.31	0.31	0.18	0.55	0.55	0.35
Max. Operating Speed	N Max	RPM	6800	6800	4000	7000	7000	4000
Speed @ Rated Torque	N Rated	RPM	5500	5500	3000	5000	5000	3000
***Continuous Rated Torque @ Rated Speed**		IN-LBS[Nm]	4.7[0.54]	4.7[0.54]	5.1[0.58]	9.4[1.06]	9.4[1.06]	10.0[1.13]
***Continuous Stall Torque**		IN-LBS[Nm]	5.8[0.66]	5.8[0.66]	5.8[0.66]	11.3[1.28]	11.3[1.28]	11.3[1.28]
Continuous Line Current		AMPS(RMS/ϕ)	2.7	1.4	0.7	5.0	2.7	1.4
Peak Torque	Tpk	IN-LBS[Nm]	17.0[2.0]	17.0[2.0]	17.0[2.0]	34.0[3.8]	34.0[3.8]	34.0[3.8]
Peak Current		AMPS(RMS/ϕ)	8.1	4.2	2.1	15.0	8.2	4. 2
Max. Theoretical Accel.		RAD/SEC^2	110,000	110,000	110,000	130,000	130,000	130,000
Torque Sensitivity	Kt	IN-LBS/AMP(RMS/ϕ)[Nm/AMP(RMS/ϕ)]	2.14[0.241]	4.12[0.465]	8.10[0.916]	2.26[0.255]	4.12[0.465]	8.12[0.917]
Back EMF (Line to Line)	±10%	Vrms/Krpm	13.4	25.9	51.0	14.2	25.9	51.1
D.C.Resistance (P-P)	±10%	OHMS	3.1	11	45	1.1	3.7	15
Inductance (P-P)	±10%	MILLIHENRIES	4.9	17	70	2.3	7.3	29
Rotor Inertia	Jm	IN-LBS-SEC^2[Kg-M^2]	.00015[.000017]	.00015[.000017]	.00015[.000017]	.00027[.000031]	.00027[.000031]	.00027[.000031]
Static Friction	Tf	IN-LBS[Nm]	0.6[0.07]	0.6[0.07]	0.6[0.07]	0.8[0.09]	0.8[0.09]	0.8[0.09]
Motor Weight		LBS[Kg]	3.5[1.59]	3.5[1.59]	3.5[1.59]	4.4[2.00]	4.4[2.00]	4.4[2.00]
Line Voltage		VAC	110	230	230	110	230	230

Custom Designed Servo Motors For Your Specific Application. Call 1-800-358-9070 Today.

Motor Data (Trap)

Motor Parameters		Units	721ATF****	721BTG****	721CTG****	722ATF****	722BTG****	722CTG****
Horsepower	Hp Rated	Hp	0.41	0.41	0.24	0.74	0.74	0.47
Kilowatts	KW Rated	KW	0.31	0.31	0.18	0.55	0.55	0.35
Max. Operating Speed	N Max	RPM	6800	6800	4000	7000	7000	4000
Speed @ Rated Torque	N Rated	RPM	5500	5500	3000	5000	5000	3000
***Continuous Rated Torque @ Rated Speed**		IN-LBS[Nm]	4.7[0.54]	4.7[0.54]	5.1[0.58]	9.4[1.06]	9.4[1.06]	10.0[1.13]
***Continuous Stall Torque**		IN-LBS[Nm]	5.8[0.66]	5.8[0.66]	5.8[0.66]	11.3[1.28]	11.3[1.28]	11.3[1.28]
Continuous Line Current		AMPS	3.8	2.0	1.0	7.1	3.9	2.0
Peak Torque	Tpk	IN-LBS[Nm]	17.0[2.0]	17.0[2.0]	17.0[2.0]	34.0[3.8]	34.0[3.8]	34.0[3.8]
Peak Current		AMPS	12.0	6.0	3.0	21.0	12.0	5.9
Max. Theoretical Accel.		RAD/SEC^2	110,000	110,000	110,000	130,000	130,000	130,000
Torque Sensitivity	Kt	IN-LBS/AMP[Nm/AMP]	1.51[0.171]	2.91[0.329]	5.73[0.647]	1.60[0.180]	2.91[0.329]	5.74[0.649]
Back EMF (Line to Line)	±10%	Vrms/Krpm	13.4	25.9	51.0	14.2	25.9	51.1
D.C. Resistance (P-P)	±10%	OHMS	3.1	11	45	1.1	3.7	15
Inductance (P-P)	±10%	MILLIHENRIES	4.9	17	70	2.3	7.3	29
Rotor Inertia	Jm	IN-LBS-SEC^2[Kg-M^2]	.00015[.000017]	.00015[.000017]	.00015[.000017]	.00027[.000031]	.00027[.000031]	.00027[.000031]
Static Friction	Tf	IN-LBS[Nm]	0.6[0.007]	0.6[0.007]	0.6[0.007]	0.8[0.09]	0.8[0.09]	0.8[0.09]
Motor Weight		LBS[Kg]	3.5[1.59]	3.5[1.59]	3.5[1.59]	4.4[2.00]	4.4[2.00]	4.4[2.00]
Line Voltage		VAC	110	230	230	110	230	230

Motor Parameters		Units	723ATF****	723BTG****	723CTG****	724ATF****	724BTG****	724CTG****
Horsepower	Hp Rated	Hp	0.91	0.91	0.63	1.3	1.3	0.79
Kilowatts	KW Rated	KW	0.68	0.68	0.47	0.93	0.93	0.58
Max. Operating Speed	N Max	RPM	6300	6300	4000	6000	6000	4000
Speed @ Rated Torque	N Rated	RPM	4500	4500	3000	5000	5000	3000
***Continuous Rated Torque @ Rated Speed**		IN-LBS[Nm]	12.8[1.44]	12.8[1.44]	13.3[1.50]	15.8[1.79]	15.8[1.79]	16.6[1.88]
***Continuous Stall Torque**		IN-LBS[Nm]	15.0[1.69]	15.0[1.69]	15.0[1.69]	18.8[2.12]	18.8[2.12]	18.8[2.12]
Continuous Line Current		AMPS	9.8	5.1	2.6	13.0	6.2	3.2
Peak Torque	Tpk	IN-LBS[Nm]	45.0[5.1]	45.0[5.1]	45.0[5.1]	56.0[6.4]	56.0[6.4]	56.0[6.4]
Peak Current		AMPS	29.0	15.0	7.8	38.0	19.0	9.7
Max. Theoretical Accel.		RAD/SEC^2	120,000	120,000	120,000	110,000	110,000	110,000
Torque Sensitivity	Kt	IN-LBS/AMP[Nm/AMP]	1.53[0.173]	2.96[0.334]	5.78[0.652]	1.49[0.168]	3.01[0.340]	5.82[0.658]
Back EMF (Line to Line)	±10%	Vrms/Krpm	13.7	26.3	51.4	13.2	26.8	51.8
D.C. Resistance (P-P)	±10%	OHMS	0.58	2.2	7.8	0.39	1.5	5.5
Inductance (P-P)	±10%	MILLIHENRIES	1.3	4.9	18	0.9	3.6	13
Rotor Inertia	Jm	IN-LBS-SEC^2[Kg-M^2]	.00038[.000043]	.00038[.000043]	.00038[.000043]	.00049[.000055]	.00049[.000055]	.00049[.000055]
Static Friction	Tf	IN-LBS[Nm]	1.0[0.11]	1.0[0.11]	1.0[0.11]	1.2[0.14]	1.2[0.14]	1.2[0.14]
Motor Weight		LBS[Kg]	5.3[2.40]	5.3[2.40]	5.3[2.40]	6.2[2.81]	6.2[2.81]	6.2[2.81]
Line Voltage		VAC	110	230	230	110	230	230

Brake Info:

Min. Holding Torque: 24 IN-LBS
Input Voltage: 24VDC
Current : .6 AMPS
Inertia: .00007 IN-LB-SEC^2
Weight Adder: 1.0 LB

*25° C Ambient with a maximum case temperature of 85° C on motor. Motor mounted on a 12" x 12" x 1/2" aluminum heatsink. Thermostat in stator windings will open if winding temperature exceeds 155° C for an approximate +10% headroom in the continuous torque rating before thermostat opens.

Mechanical Notes:

1. Axial Load: 20 LBS. Max.
2. Radial Load: 35 LBS. Max. @ 1" from face
3. Motor sealed to IP65

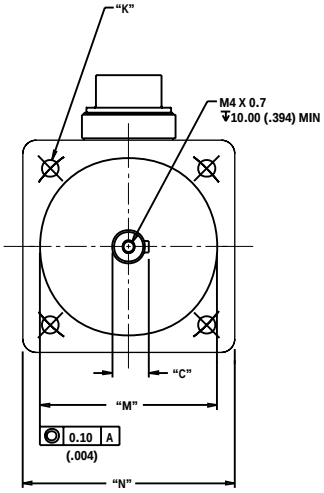

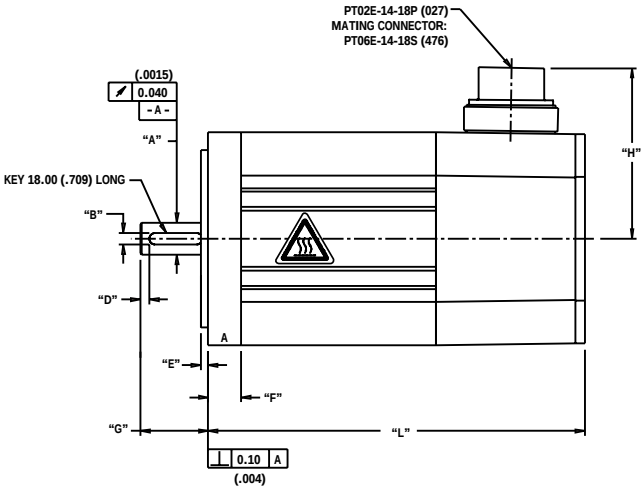

2 3/4" (72) Metric Connectorized Termination-Option 1 Motors

Model	"A"	"B"	"C"	"D"	"E"	"F"	"G"
MPM721*7*1***	ø 11.012(.4335) 11.001(.4331)	3.988(.1570) 3.958(.1558)	12.42(.489)	3.00(.118)	2.5(.10)	11.2(.44)	23.0(.91) 22.5(.89)
MPM722*7*1***	ø 11.012(.4335) 11.001(.4331)	3.988(.1570) 3.958(.1558)	12.42(.489)	3.00(.118)	2.5(.10)	11.2(.44)	23.0(.91) 22.5(.89)
MPM723*7*1***	ø 11.012(.4335) 11.001(.4331)	3.988(.1570) 3.958(.1558)	12.42(.489)	3.00(.118)	2.5(.10)	11.2(.44)	23.0(.91) 22.5(.89)
MPM724*7*1***	ø 11.012(.4335) 11.001(.4331)	3.988(.1570) 3.958(.1558)	12.42(.489)	3.00(.118)	2.5(.10)	11.2(.44)	23.0(.91) 22.5(.89)

Model	"H"	"K"	"L"	"L" w/ Brake	"M"	"N"
MPM721*7*1***	58(2.3)Max	Ø5.79(.228)THRU(4)EQ SPD AS SHOWN ON Ø75.01(2.953)B.C.	128.1(5.05)Max	166.3(6.55)Max	ø 60.012(2.3627) 59.993(2.3619)	☐ 72.0(2.84)
MPM722*7*1***	58(2.3)Max	Ø5.79(.228)THRU(4)EQ SPD AS SHOWN ON Ø75.01(2.953)B.C.	147.3(5.80)Max	185.4(7.30)Max	ø 60.012(2.3627) 59.993(2.3619)	☐ 72.0(2.84)
MPM723*7*1***	58(2.3)Max	Ø5.79(.228)THRU(4)EQ SPD AS SHOWN ON Ø75.01(2.953)B.C.	166.4(6.55)Max	204.5(8.05)Max	ø 60.012(2.3627) 59.993(2.3619)	☐ 72.0(2.84)
MPM724*7*1***	58(2.3)Max	Ø5.79(.228)THRU(4)EQ SPD AS SHOWN ON Ø75.01(2.953)B.C.	185.4(7.30)Max	223.5(8.80)Max	ø 60.012(2.3627) 59.993(2.3619)	☐ 72.0(2.84)

Metric = 7 Units: mm(in)
Option 6 Mount- Not Available

Custom Designed Servo Motors For Your Specific Application. Call 1-800-358-9070 Today.

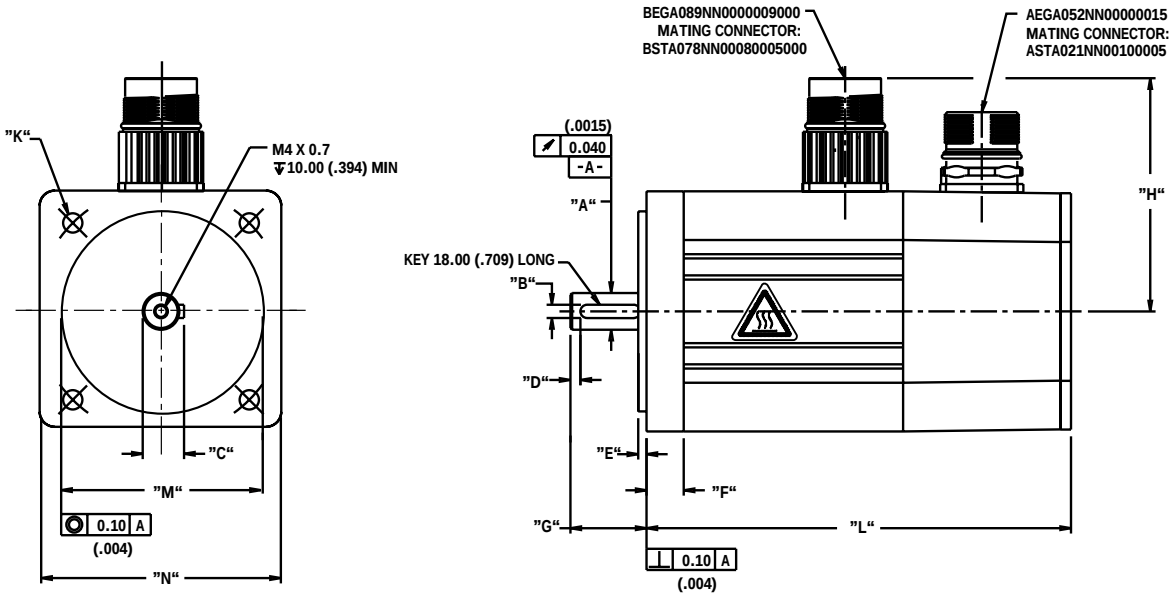

2 3/4" (72) Metric Intercon Termination-Option 2 Motors

Model	"A"	"B"	"C"	"D"	"E"	"F"	"G"
MPM721*7*2***	ø 11.012(.4335) 11.001(.4331)	3.988(.1570) 3.958(.1558)	12.42(.489)	3.00(.118)	2.5(.10)	11.2(.44)	23.0(.91) 22.5(.89)
MPM722*7*2***	ø 11.012(.4335) 11.001(.4331)	3.988(.1570) 3.958(.1558)	12.42(.489)	3.00(.118)	2.5(.10)	11.2(.44)	23.0(.91) 22.5(.89)
MPM723*7*2***	ø 11.012(.4335) 11.001(.4331)	3.988(.1570) 3.958(.1558)	12.42(.489)	3.00(.118)	2.5(.10)	11.2(.44)	23.0(.91) 22.5(.89)
MPM724*7*2***	ø 11.012(.4335) 11.001(.4331)	3.988(.1570) 3.958(.1558)	12.42(.489)	3.00(.118)	2.5(.10)	11.2(.44)	23.0(.91) 22.5(.89)

Model	"H"	"K"	"L"	"L"w/ Brake	"M"	"N"
MPM721*7*2***	70(2.8)Max	Ø5.79(.228)THRU (4)EQ SPD AS SHOWN ON Ø75.01(2.953) B.C.	128.1(5.05)Max	166.4(6.55)	ø 60.012(2.3627) 59.993(2.3619)	☐ 72.0(2.84)
MPM722*7*2***	70(2.8)Max	Ø5.79(.228)THRU (4)EQ SPD AS SHOWN ON Ø75.01(2.953) B.C.	147.3(5.80)Max	185.4(7.30)	ø 60.012(2.3627) 59.993(2.3619)	☐ 72.0(2.84)
MPM723*7*2***	70(2.8)Max	Ø5.79(.228)THRU (4)EQ SPD AS SHOWN ON Ø75.01(2.953) B.C.	166.4(6.55)Max	204.5(8.05)	ø 60.012(2.3627) 59.993(2.3619)	☐ 72.0(2.84)
MPM724*7*2***	70(2.8)Max	Ø5.79(.228)THRU (4)EQ SPD AS SHOWN ON Ø75.01(2.953) B.C.	185.4(7.30)Max	223.5(8.80)	ø 60.012(2.3627) 59.993(2.3619)	☐ 72.0(2.84)

Metric = 7 Units: mm (in)
Option 6 Mount-Not Available

2 3/4" Motor with Resolver Feedback

Option 1

Motor Therm Resolver Connector 270-00024(PT02E-14-18P(027))

Pin	Function
A	ϕR
B	ϕS
C	ϕT
D	PE GND
U	THERM
N	THERM
H	SIN
G	COS GND
S	COS
F	SIN GND
R	REF GND
E	REF
J	RES SHLD
*K	BRK (+)
*L	BRK (–)
*M	BRK SHLD
P	-
T	-

* USE ONLY WITH BRAKE OPTION

Option 3-Not Available

Option 2

Motor Therm Connector 270-000256 (BEGA089NN0000009000)

Pin	Function
1	ϕR (U1)
2	PE GND
3	ϕT (W1)
4	ϕS (V1)
*A	BRK (+)
*B	BRK (–)
C	THERM
D	THERM

* USE ONLY WITH BRAKE OPTION

Resolver Connector 270-00257 (AEGA052NN00000013000)

Pin	Function
1	-
2	REF (R1)
3	REF GND (R2)
4	COS GND (S1)
5	COS (S3)
6	SIN (S2)
7	SIN GND (S4)
8	-
9	-
10	-
11	-
12	-

Custom Designed Servo Motors For Your Specific Application. Call 1-800-358-9070 Today.

2 3/4" Motor with Encoder Feedback

Option 1

Motor Encoder Therm Connector 270-00219 (PT02E-16-23P(027))

Pin	Function
A	ϕR
B	ϕS
C	ϕT
D	PE GND
T	GROUND
E	+5VDC
F	CH A
U	CH A\
G	CH B
V	CH B\
H	CH Z
W	CH Z\
J	CH U
K	CH U\
X	CH V
L	CH V\
Y	CH W
M	CH W\
N	GND/CABLE
S	THERM
R	THERM
*P	BRK (+)
*Z	BRK (–)

* USE ONLY WITH BRAKE OPTION

Option 3-Not Available

Option 2

Motor Therm Connector 270-000256 (BEGA089NN0000009000)

Pin	Function
1	ϕR (U1)
2	PE GND
3	ϕS (W1)
4	ϕT (V1)
*A	BRK (+)
*B	BRK (–)
C	THERM
D	THERM

* USE ONLY WITH BRAKE OPTION

Encoder Connector 270-00257 (AEGA052NN00000013000)

Pin	Function
1	GND (0V)
2	CH A\(A)
3	CH A(A\)
4	CH B(B)
5	CH B\(B\)
6	CH Z(Z)
7	CH Z\(Z\)
8	+5V(+5V)
9	-
10	CH U(RLG U)
11	CH V(RLG V)
12	CH W(RLG W)

3” Frame Brushless Servo Motors

Motor Data (Sine)

Motor Parameters		Units	891ASG****	891BSG****
Horsepower	Hp Rated	Hp	0.82	0.55
Kilowatts	KW Rated	KW	0.62	0.41
Max. Operating Speed	N Max	RPM	5000	3000
Speed @ Rated Torque	N Rated	RPM	4000	2400
***Continuous Rated Torque @ Rated Speed**		IN-LBS[Nm]	13.0[1.47]	14.5[1.64]
***Continuous Stall Torque**		IN-LBS[Nm]	16.0[1.81]	16.0[1.81]
Continuous Line Current		AMPS(RMS/ϕ)	2.7	1.3
Peak Torque	Tpk	IN-LBS[Nm]	58.8[6.64]	58.8[6.64]
Peak Current		AMPS(RMS/ϕ)	9.9	4.9
Max. Theoretical Accel.		RAD/SEC^2	95,610	95,610
Torque Sensitivity	Kt	IN-LBS/AMP(RMS/ϕ)[Nm/AMP(RMS/ϕ)]	5.9[.67]	11.9[1.34]
Back EMF (Line to Line)	±10%	Vrms/Krpm	37.6	75.2
D.C.Resistance (P-P)	±10%	OHMS	3.9	15.4
Inductance (P-P)	±10%	MILLIHENRIES	10.4	39.6
Rotor Inertia	Jm	IN-LBS-SEC^2[Kg-M^2]	.000615[.0000693]	.000615[.0000693]
Static Friction	Tf	IN-LBS[Nm]	0.4[0.05]	0.4[0.05]
Motor Weight		LBS[Kg]	7.8[3.5]	7.8[3.5]
Line Voltage		VAC	230	230

Motor Parameters		Units	892ASG****	892BSG****	893ASG****	893BSG****
Horsepower	Hp Rated	Hp	1.62	1.05	1.96	1.10
Kilowatts	KW Rated	KW	1.20	0.78	1.46	0.85
Max. Operating Speed	N Max	RPM	5000	3000	4100	2000
Speed @ Rated Torque	N Rated	RPM	4000	2400	3600	1500
***Continuous Rated Torque @ Rated Speed**		IN-LBS[Nm]	25.5[2.9]	27.5[3.1]	34.4[3.8]	36.0[4.0]
***Continuous Stall Torque**		IN-LBS[Nm]	30.0[3.4]	30.0[3.4]	39.0[4.4]	39.0[4.4]
Continuous Line Current		AMPS(RMS/ϕ)	5.2	2.6	4.5	2.1
Peak Torque	Tpk	IN-LBS[Nm]	105.0[11.9]	105.0[11.9]	137.0[15.5]	137.0[15.5]
Peak Current		AMPS(RMS/ϕ)	18.9	9.6	16.3	7.9
Max. Theoretical Accel.		RAD/SEC^2	105,954	105,954	100,000	100,000
Torque Sensitivity	Kt	IN-LBS/AMP(RMS/ϕ)[Nm/AMP(RMS/ϕ)]	5.8[.66]	11.6[1.31]	8.8[.99]	17.5[1.98]
Back EMF (Line to Line)	±10%	Vrms/Krpm	36.6	73.2	55.0	110.0
D.C.Resistance (P-P)	±10%	OHMS	1.5	6.0	1.9	7.7
Inductance (P-P)	±10%	MILLIHENRIES	5.1	20.2	7.5	29.1
Rotor Inertia	Jm	IN-LBS-SEC^2[Kg-M^2]	.000991[.0001116]	.000991[.0001116]	.00137[.000154]	.00137[.000154]
Static Friction	Tf	IN-LBS[Nm]	0.5[0.06]	0.5[0.06]	0.6[0.07]	0.6[0.07]
Motor Weight		LBS[Kg]	10.4[4.7]	10.4[4.7]	14.0[6.0]	14.0[6.0]
Line Voltage		VAC	230	230	230	230

Brake Info:

Min. Holding Torque: 60 IN-LBS
Input Voltage: 24VDC
Current : 0.6 AMPS
Inertia: .00015 IN-LB-SEC^2
Weight Adder: 2.2 LBS

*25° C Ambient with a maximum case temperature of 100° C on motor. Motor mounted on a 10” x 10” x 1/4” aluminum heatsink. Thermostat in stator windings will open if winding temperature exceeds 155° C. This allows +10% headroom in the continuous torque rating before thermostat opens.

Mechanical Notes:
1. Axial Load: 25 LBS. Max.
2. Radial Load: 40 LBS. Max. @ 1” from face
3. Motor sealed to IP65

Custom Designed Servo Motors For Your Specific Application. Call 1-800-358-9070 Today.

Motor Data (Trap)

Motor Parameters		Units	891ATG****	891BTG****
Horsepower	Hp Rated	Hp	0.82	0.55
Kilowatts	KW Rated	KW	0.62	0.41
Max. Operating Speed	N Max	RPM	5000	3000
Speed @ Rated Torque	N Rated	RPM	4000	2400
***Continuous Rated Torque @ Rated Speed**		IN-LBS[Nm]	13.0[1.47]	14.5[1.64]
***Continuous Stall Torque**		IN-LBS[Nm]	16.0[1.81]	16.0[1.81]
Continuous Line Current		AMPS	3.8	1.9
Peak Torque	Tpk	IN-LBS[Nm]	58.8[6.64]	58.8[6.64]
Peak Current		AMPS	14.0	7.0
Max. Theoretical Accel.		RAD/SEC^2	95,610	95,610
Torque Sensitivity	Kt	IN-LBS/AMP[Nm/AMP]	4.2[0.48]	8.4[0.96]
Back EMF (Line to Line)	±10%	Vrms/Krpm	37.6	75.2
D.C.Resistance (P-P)	±10%	OHMS	3.9	15.4
Inductance (P-P)	±10%	MILLIHENRIES	10.4	39.6
Rotor Inertia	Jm	IN-LBS-SEC^2[Kg-M^2]	.000615[.0000693]	.000615[.0000693]
Static Friction	Tf	IN-LBS[Nm]	0.4[0.05]	0.4[0.05]
Motor Weight		LBS[Kg]	7.8[3.5]	7.8[3.5]
Line Voltage		VAC	230	230

Motor Parameters		Units	892ATG****	892BTG****	893ATG****	893BTG****
Horsepower	Hp Rated	Hp	1.62	1.05	1.96	1.10
Kilowatts	KW Rated	KW	1.20	0.78	1.46	0.85
Max. Operating Speed	N Max	RPM	5000	3000	4100	2000
Speed @ Rated Torque	N Rated	RPM	4000	2400	3600	1500
***Continuous Rated Torque @ Rated Speed**		IN-LBS[Nm]	25.5[2.9]	27.5[3.1]	34.4[3.8]	36.0[4.0]
***Continuous Stall Torque**		IN-LBS[Nm]	30.0[3.4]	30.0[3.4]	39.0[4.4]	39.0[4.4]
Continuous Line Current		AMPS	7. 3	3 .7	6.3	3.0
Peak Torque	Tpk	IN-LBS[Nm]	105.0[11.9]	105.0[11.9]	137.0[15.5]	137.0[15.5]
Peak Current		AMPS	26.8	13.6	23.1	11.1
Max. Theoretical Accel.		RAD/SEC^2	105,954	105,954	100,000	100,000
Torque Sensitivity	Kt	IN-LBS/AMP[Nm/AMP]	4.1[0.47]	8.2[0.94]	6.2[0.7]	12.4[1.4]
Back EMF (Line to Line)	±10%	Vrms/Krpm	36.6	73.2	55.0	110.0
D.C.Resistance (P-P)	±10%	OHMS	1. 5	6.0	1.9	7.7
Inductance (P-P)	±10%	MILLIHENRIES	5.1	20. 2	7.5	29.1
Rotor Inertia	Jm	IN-LBS-SEC^2[Kg-M^2]	.000991[.0001116]	.000991[.0001116]	.00137[.000154]	.00137[.000154]
Static Friction	Tf	IN-LBS[Nm]	0.5[0.06]	0.5[0.06]	0.6[0.07]	0.6[0.07]
Motor Weight		LBS[Kg]	10.4[4.7]	10.4[4.7]	14.0[6.0]	14.0[6.0]
Line Voltage		VAC	230	230	230	230

Brake Info:

Min. Holding Torque: 60 IN-LBS
Input Voltage: 24VDC
Current : 2.2AMPS
Inertia: .00015IN-LB-SEC^2
Weight Adder: 2.2LBS

*25° C Ambient with a maximum case temperature of 100° C on motor. Motor mounted on a 10" x 10" x 1/4" aluminum heatsink. Thermostat in stator windings will open if winding temperature exceeds 155° C. This allows +10% headroom in the continuous torque rating before thermostat opens.

Mechanical Notes:

1. Axial Load: 25 LBS. Max.
2. Radial Load: 40 LBS. Max. @ 1" from face
3. Motor sealed to IP65

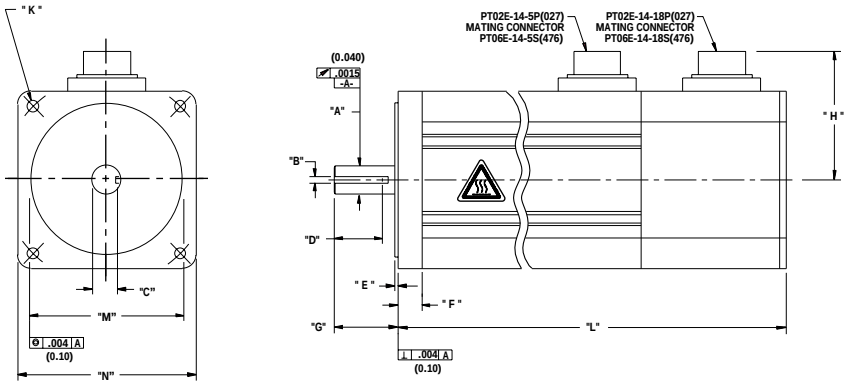

3" (89) English and Metric Connectorized Termination-Option 1 Motors

Model	"A"	"B"	"C"	"D"	"E"	"F"	"G"
MPM891*6*****	ø .4997 (12.692) .4993 (12.682)	.1265(3.213) .1250(3.175)	.420 (10.67)	.90 (22.9) Min	.06 (1.6)	.44 (11.2)	1.20(30.5) 1.16(29.5)
MPM891*7*****	ø 14.000 (.5512) 13.985 (.5508)	5.08 (.200) 5.00 (.197)	10.90 (.429)	20.0(.79) Min	3.0 (.12)	11.2(.44)	30.5(1.20) 29.5(1.16)
MPM892*6*****	ø .4997 (12.692) .4993 (12.682)	.1265 (3.213) .1250 (3.175)	.420 (10.67)	.90 (22.9) Min	.06 (1.6)	.44 (11.2)	1.20(30.5) 1.16(29.5)
MPM892*7*****	ø 14.000(.5512) 13.985(.5508)	5.08 (.200) 5.00 (.197)	10.90 (.429)	20.0(.79) Min	3.0 (.12)	11.2(.44)	30.5(1.20) 29.5(1.16)
MPM893*6*****	ø .4997(12.692) .4993 (12.682)	.1265 (3.213) .1250 (3.175)	.420 (10.67)	.90 (22.9) Min	.06 (1.6)	.44 (11.2)	1.20(30.5) 1.16(29.5)
MPM893*7*****	ø 14.000 (.5512) 13.985 (.5508)	5.08 (.200) 5.00 (.197)	10.90 (.429)	20.0(.79) Min	3.0 (.12)	11.2(.44)	30.5(1.20) 29.5(1.16)

Model	"H"	"K"	"L"	"L" w/ Brake	"M"	"N"
MPM891*6*****	2.5 (64.0) Max	Ø.223(5.66) THRU (4) EQ SPD AS SHOWN ON Ø3.875(98.43) B.C.	7.24(183.9) Max	8.74 (222.0) Max	ø 2.877 (73.08) 2.873(72.97)	□ 3.31(84.1)
MPM891*7*****	64.0(2.5) Max	Ø7.00(.276) THRU (4) EQ SPD AS SHOWN ON Ø100.00(3.937) B.C.	183.9(7.24) Max	222.0(8.74) Max	ø 80.00(3.150) 79.98(3.149)	□ 89.0(3.50)
MPM892*6*****	2.5 (64.0) Max	Ø.223(5.66) THRU (4) EQ SPD AS SHOWN ON Ø3.875(98.43) B.C.	8.74(222.0) Max	10.24(260.1) Max	ø 2.877 (73.08) 2.873(72.97)	□ 3.31(84.1)
MPM892*7*****	64.0(2.5) Max	Ø7.00(.276) THRU (4) EQ SPD AS SHOWN ON Ø100.00(3.937) B.C.	222.0(8.74) Max	260.1(10.24) Max	ø 80.00(3.150) 79.98(3.149)	□ 89.0(3.50)
MPM893*6*****	2.5 (64.0) Max	Ø.223(5.66) THRU (4) EQ SPD AS SHOWN ON Ø3.875(98.43) B.C.	10.24(260.1) Max	11.74(298.2) Max	ø 2.877(73.08) 2.873(72.97)	□ 3.31(84.1)
MPM893*7*****	64.0(2.5) Max	Ø7.00(.276) THRU (4) EQ SPD AS SHOWN ON Ø100.00(3.937) B.C.	260.1(10.24) Max	298.2(11.74) Max	ø 80.00(3.150) 79.98(3.149)	□ 89.0(3.50)

English = 6 (NEMA 34) Units: in (mm)
Metric = 7 Units: mm (in)

For Mechanical Dimensions on Termination Option 2 Consult Factory.

Custom Designed Servo Motors For Your Specific Application. Call 1-800-358-9070 Today.

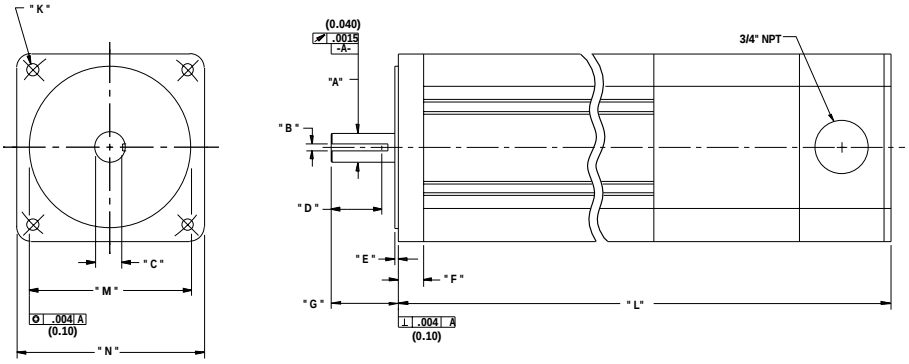

3" (89)English and Metric NPT Termination-Option 3 Motors

Model	"A"	"B"	"C"	"D"	"E"	"F"	"G
MPM891*6***	ø .4997 (12.692) .4993 (12.682)	.1265 (3.213) .1250 (3.175)	.420 (10.67)	.90 (22.9) Min	.06 (1.6)	.44 (11.2)	1.20(1.16(
MPM891*7***	ø 14.000 (.5512) 13.985 (.5508)	5.08 (.200) 5.00 (.197)	10.90 (.429)	20.0(.79) Min	3.0 (.12)	11.2(.44)	30.5(29.5(
MPM892*6***	ø .4997 (12.692) .4993 (12.682)	.1265 (3.213) .1250 (3.175)	.420 (10.67)	.90 (22.9) Min	.06 (1.6)	.44 (11.2)	1.20(1.16(
MPM892*7***	ø 14.000 (.5512) 13.985 (.5508)	5.08 (.200) 5.00 (.197)	10.90 (.429)	20.0(.79) Min	3.0 (.12)	11.2(.44)	30.5(29.5(
MPM893*6***	ø .4997 (12.692) .4993 (12.682)	.1265 (3.213) .1250 (3.175)	.420 (10.67)	.90 (22.9) Min	.06 (1.6)	.44 (11.2)	1.20(1.16(
MPM893*7***	ø 14.000 (.5512) 13.985 (.5508)	5.08 (.200) 5.00 (.197)	10.90 (.429)	20.0(.79) Min	3.0 (.12)	11.2(.44)	30.5(29.5(

3" Motor with Resolver Feedback

Option 1

Motor Connector 270-00026 (PT02E-14-5P(027))

Pin	Function
A	ϕR
B	ϕS
C	ϕT
D	PE GND
E	-

Resolver Connector 270-00024(PT02E-14-18P(027)

Pin	Function
U	THERM
N	THERM
H	SIN
G	COS GND
S	COS
F	SIN GND
R	REF GND
E	REF
D	RES SHLD
P	GND
A	-
B	-
C	-
J	-
K	-
L	-
M	-
T	-

*** Option 1 with brake**

Motor Brake Connector 270-00032 (PT02E-16-8P(027))

Pin	Function
A	ϕR
B	ϕS
C	ϕT
D	PE GND
E	BRK SHLD
F	BRK (+)
G	BRK (–)
H	-

Option 2

Motor Connector 270-00256(BEGA089NN0000009000)

Pin	Function
1	ϕR (U1)
2	PE GND
3	ϕT (W1)
4	ϕS (V1)
*A	BRK (+)
*B	BRK (–)
C	THERM
D	THERM

*USE ONLY WITH BRAKE OPTION

Resolver Connector 270-00257(AEGA052NN00000013000)

Pin	Function
1	-
2	REF (R1)
3	REF GND (R2)
4	COS GND (S1)
5	COS (S3)
6	SIN (S2)
7	SIN GND (S4)
8	-
9	-
10	-
11	-
12	-

Option 3

Connection Chart (NPT) Resolver

Terminal	Function	
R	ϕR	TB3 (MOTOR CONN)
S	ϕS	TB3 (MOTOR CONN)
T	ϕT	TB3 (MOTOR CONN)
GND	PE GND	TB3 (MOTOR CONN)
*S11	BRK (+)	TB2 (BRAKE CONN)
*S10	BRK (-)	TB2 (BRAKE CONN)
S9	REF GND	TB1 (RESOLVER & THERM CONN)
S8	REF	TB1 (RESOLVER & THERM CONN)
S7	SIN	TB1 (RESOLVER & THERM CONN)
S6	COS	TB1 (RESOLVER & THERM CONN)
S5	COS GND	TB1 (RESOLVER & THERM CONN)
S4	SIN GND	TB1 (RESOLVER & THERM CONN)
S3	THERM	TB1 (RESOLVER & THERM CONN)
S2	THERM	TB1 (RESOLVER & THERM CONN)
S1	RES SHLD	TB1 (RESOLVER & THERM CONN)

*USE ONLY WITH BRAKE OPTION

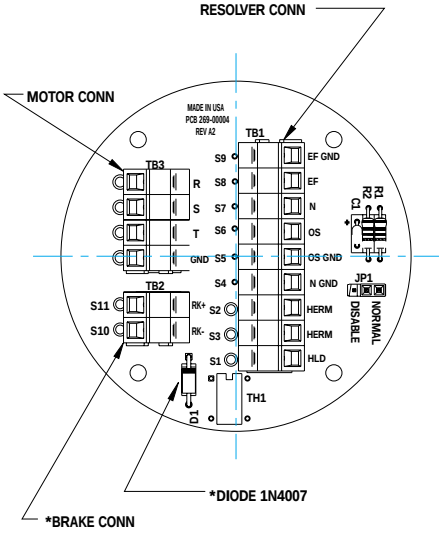

Custom Designed Servo Motors For Your Specific Application. Call 1-800-358-9070 Today.

3" Motor with Encoder Feedback

Option 1

Motor Connector 270-00026 (PT02E-14-5P(027))

Pin	Function
A	ϕR
B	ϕS
C	ϕT
D	PE GND
E	-

Encoder Connector 270-00024 (PT02E-14-18P(027))

Pin	Function
T	GND
K	+5VDC
B	CH A
C	CH A\
N	CH B
P	CH B\
M	CH Z
U	CH Z\
E	CH U
R	CH U\
F	CH V
S	CH V\
G	CH W
H	CH W\
D	GND/CABLE
A	THERM
L	THERM
J	GND

Option 1 with brake

Motor Brake Connector 270-00032 (PT02E-16-8P(027))

Pin	Function
A	ϕR
B	ϕS
C	ϕT
D	PE GND
E	BRK SHLD
F	BRK (+)
G	BRK (–)
H	-

Option 3-Consult Factory

Option 2

Motor Brake Connector 270-00256 (BEGA089NN00000013000)

Pin	Function
1	ϕR (U1)
2	PE GND
3	ϕT (W1)
4	ϕS (V1)
*A	BRK (+)
*B	BRK (–)
C	THERM
D	THERM

*USE ONLY WITH BRAKE OPTION

Encoder Connector 270-00257 (AEGA052NN00000013000)

Pin	Function
1	GND (OV)
2	CH A\ (A)
3	CH A (A\)
4	CH B (B)
5	CH B\ (B\)
6	CH Z (Z)
7	CH Z\ (Z\)
8	+5V (+5V)
9	-
10	CH U (RLGU)
11	CH V (RLGV)
12	CH W (RLGW)

4” Frame Brushless Servo Motors

Motor Data (Sine)

Motor Parameters		Units	1141ASG****	1141BSG****
Horsepower	Hp Rated	Hp	2.1	1.2
Kilowatts	KW Rated	KW	1.60	.88
Max. Operating Speed	N Max	RPM	4200	2100
Speed @ Rated Torque	N Rated	RPM	3000	1500
***Continuous Rated Torque @ Rated Speed**		IN-LBS[Nm]	45.0[5.1]	50.0[5.6]
***Continuous Stall Torque**		IN-LBS[Nm]	54.0[6.1]	54.0[6.1]
Continuous Line Current		AMPS(RMS/ϕ)	6.2	3.1
Peak Torque	Tpk	IN-LBS[Nm]	189.0[21.3]	189.0[21.3]
Peak Current		AMPS(RMS/ϕ)	21.6	10.8
Max. Theoretical Accel.		RAD/SEC^2	54,000	54,000
Torque Sensitivity	Kt	IN-LBS/AMP(RMS/ϕ)[Nm/AMP(RMS/ϕ)]	8.8[.99]	17.5[1.98]
Back EMF (Line to Line)	±10%	Vrms/Krpm	55.0	110.0
D.C.Resistance (P-P)	±10%	OHMS	0.83	3.3
Inductance (P-P)	±10%	MILLIHENRIES	6.1	24.4
Rotor Inertia	Jm	IN-LBS-SEC^2[Kg-M^2]	.0035[.00039]	.0035[.00039]
Static Friction	Tf	IN-LBS[Nm]	1.0[0.11]	1.0[0.11]
Motor Weight		LBS[Kg]	19.4[8.8]	19.4[8.8]
Line Voltage		VAC	230	230

Motor Parameters		Units	1142ASG****	1142BSG****	1143ASG****	1143BSG****
Horsepower	Hp Rated	Hp	3.3	1.8	4.6	2.4
Kilowatts	KW Rated	KW	2.5	1.33	3.4	1.8
Max. Operating Speed	N Max	RPM	4200	2100	4200	2100
Speed @ Rated Torque	N Rated	RPM	3000	1500	3000	1500
***Continuous Rated Torque @ Rated Speed**		IN-LBS[Nm]	69.1[7.8]	75.0[8.4]	96.8[10.9]	104.0[11.7]
***Continuous Stall Torque**		IN-LBS[Nm]	83.0[9.3]	83.0[9.3]	116.2[13.1]	116.2[13.1]
Continuous Line Current		AMPS(RMS/ϕ)	9.5	4.7	13.2	6.6
Peak Torque	Tpk	IN-LBS[Nm]	290.5[32.7]	290.5[32.7]	406.7[45.7]	406.7[45.7]
Peak Current		AMPS(RMS/ϕ)	33.1	16.5	46.4	23.2
Max. Theoretical Accel.		RAD/SEC^2	44,015	44,015	42,811	42,811
Torque Sensitivity	Kt	IN-LBS/AMP(RMS/ϕ)[Nm/AMP(RMS/ϕ)]	8.8[.99]	17.5[1.98]	8.8[.99]	17.5[1.98]
Back EMF (Line to Line)	±10%	Vrms/Krpm	55.0	110.0	55.0	110.0
D.C.Resistance (P-P)	±10%	OHMS	.40	1.8	.27	1.1
Inductance (P-P)	±10%	MILLIHENRIES	2.8	12.6	2.0	8.1
Rotor Inertia	Jm	IN-LBS-SEC^2 [Kg-M^2]	.0066[.00074]	.0066[.00074]	.0095[.00107]	.0095[.00107]
Static Friction	Tf	IN-LBS[Nm]	1.4[0.16]	1.4[0.16]	1.8[0.2]	1.8[0.2]
Motor Weight		LBS[Kg]	27.6[12.5]	27.6[12.5]	37.0[16.8]	37.0[16.8]
Line Voltage		VAC	230	230	230	230

Brake Info

Min. Holding Torque: 240 IN-LBS
Input Voltage: 24VDC
Current : .88 AMPS
Inertia: .000412 IN-LB-SEC^2
Weight Adder: 6 LBS

*25° C Ambient with a maximum case temperature of 100° C on motor. Motor mounted on a 12” x 12” x 1/2” aluminum heatsink. Thermostat in stator windings will open if winding temperature exceeds 155° C. This allows +10% headroom in the continuous torque rating before thermostat opens.

Mechanical Notes:

1. Axial Load: 50 LBS. Max.
2. Radial Load: 100 LBS. Max. @ 1” from face
3. Motor Sealed to IP65

Custom Designed Servo Motors For Your Specific Application. Call 1-800-358-9070 Today.

Motor Data (Trap)

Motor Parameters		Units	1141ATG****	1141BTG****
Horsepower	Hp Rated	Hp	2.1	1.2
Kilowatts	KW Rated	KW	1.6	.88
Max. Operating Speed	N Max	RPM	4200	2100
Speed @ Rated Torque	N Rated	RPM	3000	1500
***Continuous Rated Torque @ Rated Speed**		IN-LBS[Nm]	45.0[5.1]	50.0[5.6]
***Continuous Stall Torque**		IN-LBS[Nm]	54.0[6.1]	54.0[6.1]
Continuous Line Current		AMPS	8.7	4.4
Peak Torque	Tpk	IN-LBS[Nm]	189.0[21.3]	189.0[21.3]
Peak Current		AMPS	30.5	15.3
Max. Theoretical Accel.		RAD/SEC^2	54,000	54,000
Torque Sensitivity	Kt	IN-LBS/AMP[Nm/AMP]	6.2[0.71]	12.4[1.40]
Back EMF (Line to Line)	±10%	Vrms/Krpm	55.0	110.0
D.C.Resistance (P-P)	±10%	OHMS	.82	3.3
Inductance (P-P)	±10%	MILLIHENRIES	6.1	24.4
Rotor Inertia	Jm	IN-LBS-SEC^2[Kg-M^2]	.0035[.00039]	.0035[.00039]
Static Friction	Tf	IN-LBS[Nm]	1.0[0.11]	1.0[0.11]
Motor Weight		LBS[Kg]	19.4[8.8]	19.4[8.8]
Line Voltage		VAC	230	230

Motor Parameters		Units	1142ATG****	1142BTG****	1143ATG****	1143BTG****
Horsepower	Hp Rated	Hp	3.3	1.8	4.6	2.4
Kilowatts	KW Rated	KW	2.5	1.3	3.4	1.8
Max. Operating Speed	N Max	RPM	4200	2100	4200	2100
Speed @ Rated Torque	N Rated	RPM	3000	1500	3000	1500
***Continuous Rated Torque @ Rated Speed**		IN-LBS[Nm]	69.1[7.8]	75.0[8.4]	96.8[10.9]	104.0[11.7]
***Continuous Stall Torque**		IN-LBS[Nm]	83.0[9.3]	83.0[9.3]	116.2[13.1]	116.2[13.1]
Continuous Line Current		AMPS	13.4	6.7	18.7	9.4
Peak Torque	Tpk	IN-LBS[Nm]	290.5[32.7]	290.5[32.7]	406.7[45.7]	406.7[45.7]
Peak Current		AMPS	46.8	23.4	65.6	32.8
Max. Theoretical Accel.		RAD/SEC^2	44,015	44,015	42,811	42,811
Torque Sensitivity	Kt	IN-LBS/AMP[Nm/AMP]	6.2[0.71]	12.4[1.40]	6.2[0.71]	12.4[1.40]
Back EMF (Line to Line)	±10%	Vrms/Krpm	55.0	110.0	55.0	110.0
D.C.Resistance (P-P)	±10%	OHMS	.40	1.8	.27	1.1
Inductance (P-P)	±10%	MILLIHENRIES	2.8	12.6	2.0	8.1
Rotor Inertia	Jm	IN-LBS-SEC^2[Kg-M^2]	.0066[.00074]	.0066[.00074]	.0095[.00107]	.0095[.00107]
Static Friction	Tf	IN-LBS[Nm]	1.4[0.16]	1.4[0.16]	1.8[0.2]	1.8[0.2]
Motor Weight		LBS[Kg]	27.6[12.5]	27.6[12.5]	37.0[16.8]	37.0[16.8]
Line Voltage		VAC	230	230	230	230

Brake Info:

Min. Holding Torque: 240 IN-LBS
Input Voltage: 24VDC
Current : .88 AMPS
Inertia: .000412 IN-LB-SEC^2
Weight Adder: 6 LBS

*25° C Ambient with a maximum case temperature of 100° C on motor. Motor mounted on a 12" x 12" x 1/2" aluminum heatsink. Thermostat in stator windings will open if winding temperature exceeds 155° C. This allows +10% headroom in the continuous torque rating before thermostat opens.

Mechanical Notes:

1. Axial Load: 50 LBS. Max.
2. Radial Load: 100 LBS. Max. @ 1" from face
3. Motor Sealed to IP65

Motor Data (Sine)

Motor Parameters		Units	1141CSJ****	1141DSJ****
Horsepower	Hp Rated	Hp	2.1	1.2
Kilowatts	KW Rated	KW	1.6	.88
Max. Operating Speed	N Max	RPM	4200	2100
Speed @ Rated Torque	N Rated	RPM	3000	1500
***Continuous Rated Torque @ Rated Speed**		IN-LBS[Nm]	45.0[5.1]	50.0[5.6]
***Continuous Stall Torque**		IN-LBS[Nm]	54.0[6.1]	54.0[6.1]
Continuous Line Current		AMPS(RMS/ϕ)	3.1	1.6
Peak Torque	Tpk	IN-LBS[Nm]	189.0[21.3]	189.0[21.3]
Peak Current		AMPS(RMS/ϕ)	10.8	5.4
Max. Theoretical Accel.		RAD/SEC^2	54,000	54,000
Torque Sensitivity	Kt	IN-LBS/AMP(RMS/ϕ)[Nm/AMP(RMS/ϕ)]	17.5[1.98]	34.9[3.94]
Back EMF (Line to Line)	±10%	Vrms/Krpm	110.0	220.0
D.C.Resistance (P-P)	±10%	OHMS	3.2	13.3
Inductance (P-P)	±10%	MILLIHENRIES	24.0	99.0
Rotor Inertia	Jm	IN-LBS-SEC^2[Kg-M^2]	.0035[.00039]	.0035[.00039]
Static Friction	Tf	IN-LBS[Nm]	1.0[0.11]	1.0[0.11]
Motor Weight		LBS[Kg]	19.4[8.8]	19.4[8.8]
Line Voltage		VAC	460	460

Motor Parameters		Units	1142CSJ****	1142DSJ****	1143CSJ****	1143DSJ****
Horsepower	Hp Rated	Hp	3.3	1.8	4.6	2.4
Kilowatts	KW Rated	KW	2.5	1.3	3.4	1.8
Max. Operating Speed	N Max	RPM	4200	2100	4200	2100
Speed @ Rated Torque	N Rated	RPM	3000	1500	3000	1500
***Continuous Rated Torque @ Rated Speed**		IN-LBS[Nm]	69.1[7.8]	75.0[8.4]	96.8[10.9]	104.0[11.7]
***Continuous Stall Torque**		IN-LBS[Nm]	83.0[9.3]	83.0[9.3]	116.2[13.1]	116.2[13.1]
Continuous Line Current		AMPS(RMS/ϕ)	4.7	2.3	6.6	3.3
Peak Torque	Tpk	IN-LBS[Nm]	290.5[32.7]	290.5[32.7]	406.7[45.7]	406.7[45.7]
Peak Current		AMPS(RMS/ϕ)	16.5	8.3	23.2	11.6
Max. Theoretical Accel.		RAD/SEC^2	44,015	44,015	42,811	42,811
Torque Sensitivity	Kt	IN-LBS/AMP(RMS/ϕ)[Nm/AMP(RMS/ϕ)]	17.5[1.98]	34.9[3.94]	17.5[1.98]	34.9[3.94]
Back EMF (Line to Line)	±10%	Vrms/Krpm	110.0	220.0	110.0	220.0
D.C.Resistance (P-P)	±10%	OHMS	1.8	6.3	1.0	3.9
Inductance (P-P)	±10%	MILLIHENRIES	12.1	47.4	7.8	29.6
Rotor Inertia	Jm	IN-LBS-SEC^2[Kg-M^2]	.0066[.00074]	.0066[.00074]	.0095[.00107]	.0095[.00107]
Static Friction	Tf	IN-LBS[Nm]	1.4[0.16]	1.4[0.16]	1.8[0.2]	1.8[0.2]
Motor Weight		LBS[Kg]	27.6[12.5]	27.6[12.5]	37.0[16.8]	37.0[16.8]
Line Voltage		VAC	460	460	460	460

Brake Info:

Min. Holding Torque: 240 IN-LBS
Input Voltage: 24VDC
Current : .88 AMPS
Inertia: .000412 IN-LB-SEC^2
Weight Adder: 6 LBS

*25° C Ambient with a maximum case temperature of 100° C on motor. Motor mounted on a 12" x 12" x 1/2" aluminum heatsink. Thermostat in stator windings will open if winding temperature exceeds 155° C. This allows +10% headroom in the continuous torque rating before thermostat opens.

Mechanical Notes:
1. Axial Load: 50 LBS. Max.
2. Radial Load: 100 LBS. Max. @ 1" from face
3. Motor Sealed to IP65

Custom Designed Servo Motors For Your Specific Application. Call 1-800-358-9070 Today.

Motor Data (Trap)

Motor Parameters		Units	1141CTJ****	1141DTJ****
Horsepower	Hp Rated	Hp	2.1	1.2
Kilowatts	KW Rated	KW	1.6	.88
Max. Operating Speed	N Max	RPM	4200	2100
Speed @ Rated Torque	N Rated	RPM	3000	1500
***Continuous Rated Torque @ Rated Speed**		IN-LBS[Nm]	45.0[5.1]	50.0[5.6]
***Continuous Stall Torque**		IN-LBS[Nm]	54.0[6.1]	54.0[6.1]
Continuous Line Current		AMPS	4.4	2.2
Peak Torque	Tpk	IN-LBS[Nm]	189.0[21.3]	189.0[21.3]
Peak Current		AMPS	15.3	7.6
Max. Theoretical Accel.		RAD/SEC^2	54,000	54,000
Torque Sensitivity	Kt	IN-LBS/AMP[Nm/AMP]	12.4[1.40]	24.7[2.79]
Back EMF (Line to Line)	±10%	Vrms/Krpm	1100	2200
D.C.Resistance (P-P)	±10%	OHMS	3.2	13.3
Inductance (P-P)	±10%	MILLIHENRIES	24.0	99.0
Rotor Inertia	Jm	IN-LBS-SEC^2[Kg-M^2]	.0035[.00039]	.0035[.00039]
Static Friction	Tf	IN-LBS[Nm]	1.0[0.11]	1.0[0.11]
Motor Weight		LBS[Kg]	19.4[8.8]	19.4[8.8]
Line Voltage		VAC	460	460

Motor Parameters		Units	1142CTJ****	1142DTJ****	1143CTJ****	1143DTJ****
Horsepower	Hp Rated	Hp	3.3	1.8	4.6	2.4
Kilowatts	KW Rated	KW	2.5	1.3	3.4	1.8
Max. Operating Speed	N Max	RPM	4200	2100	4200	2100
Speed @ Rated Torque	N Rated	RPM	3000	1500	3000	1500
***Continuous Rated Torque @ Rated Speed**		IN-LBS[Nm]	69.1[7.8]	75.0[8.4]	96.8[10.9]	104.0[11.7]
***Continuous Stall Torque**		IN-LBS[Nm]	83.0[9.3]	83.0[9.3]	116.2[13.1]	116.2[13.1]
Continuous Line Current		AMPS	6.7	3.3	9.4	4.7
Peak Torque	Tpk	IN-LBS[Nm]	290.5[32.7]	290.5[32.7]	406.7[45.7]	406.7[45.7]
Peak Current		AMPS	23.4	11.7	32.8	16.4
Max. Theoretical Accel.		RAD/SEC^2	44,015	44,015	42,811	42,811
Torque Sensitivity	Kt	IN-LBS/AMP[Nm/AMP]	12.4[1.40]	24.7[2.79]	12.4[1.40]	24.7[2.79]
Back EMF (Line to Line)	±10%	Vrms/Krpm	1100	2200	1100	2200
D.C.Resistance (P-P)	±10%	OHMS	1.8	6.3	1.0	3.9
Inductance (P-P)	±10%	MILLIHENRIES	12.1	47.4	7.8	29.6
Rotor Inertia	Jm	IN-LBS-SEC^2[Kg-M^2]	.0066[.00074]	.0066[.00074]	.0095[.00107]	.0095[.00107]
Static Friction	Tf	IN-LBS[Nm]	1.40.[16]	1.4[0.16]	1.8[0.2]	1.8[0.2]
Motor Weight		LBS[Kg]	27.6[12.5]	27.6[12.5]	37.0[16.8]	37.0[16.8]
Line Voltage		VAC	460	460	460	460

Brake Info:

Min. Holding Torque: 240 IN-LBS
Input Voltage: 24VDC
Current : .88 AMPS
Inertia: .000412 IN-LB-SEC^2
Weight Adder: 6 LBS

*25° C Ambient with a maximum case temperature of 100° C on motor. Motor mounted on a 12" x 12" x 1/2" aluminum heatsink. Thermostat in stator windings will open if winding temperature exceeds 155° C. This allows +10% headroom in the continuous torque rating before thermostat opens.

Mechanical Notes:

1. Axial Load: 50 LBS. Max.
2. Radial Load: 100 LBS. Max. @ 1" from face
3. Motor Sealed to IP65

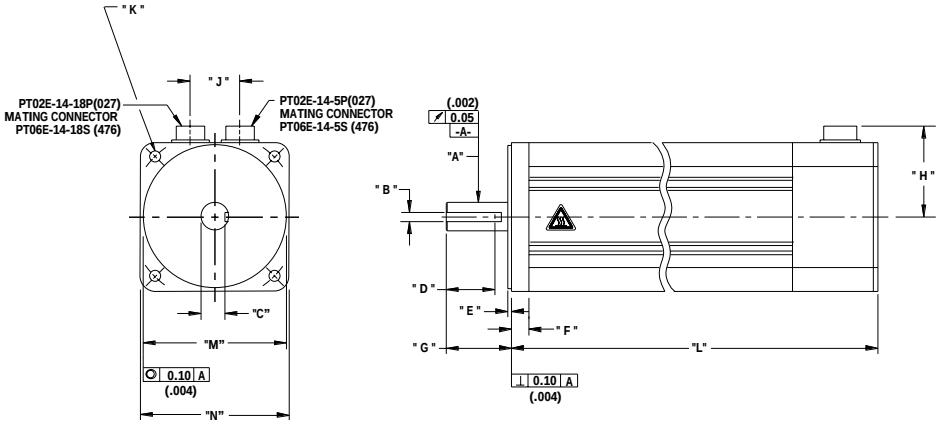

4" (114) English and Metric Connectorized Termination-Option 1 Motors

Model	"A"	"B"	"C"	"D"	"E"	"F"	"G"
MPM1141***6***	ø .6245(15.862) .6241(15.852)	.1890(4.801) .1875(4.763)	.509(12.93)	1.5(38.1)Min	.10(2.5)	.53(13.5)	1.90(48.2) 1.86(47.1)
MPM1141***7***	ø 18.999(.7480) 18.987(.7475)	5.99(.236) 5.97(.235)	15.49(.610)	37.0(1.46)Min	3.0(.12)	13.0(.51)	50.5(1.99) 49.5(1.95)
MPM1142***6***	ø .8750(22.225) .8745(22.212)	.1890(4.801) .1875(4.763)	.774(19.65)	1.5(38.1)Min	.10(2.5)	.53(13.5)	1.90(48.2) 1.86(47.1)
MPM1142***7***	ø 24.000(.9449) 23.988(.9444)	7.998(.3149) 7.963(.3135)	19.90(.784)	37.0(1.46)Min	3.0(.12)	13.0(.51)	50.5(1.99) 49.5(1.95)
MPM1143***6***	ø .8750(22.225) .8745(22.212)	.1890(4.801) .1875(4.763)	.774(19.65)	1.5(38.1)Min	.10(2.5)	.53(13.5)	1.90(48.2) 1.86(47.1)
MPM1143***7***	ø 24.000(.9449) 23.988(.9444)	7.998(.3149) 7.963(.3135)	19.90(.784)	37.0(1.46)Min	3.0(.12)	13.0(.51)	50.5(1.99) 49.5(1.95)

Model	"H"	"J"	"K"	"L"	"L"w/ Brake	"M"	"N"
MPM1141***6***	2.8(71)Max	1.5(38.0)	3/8-16UNC-2B THRU (4)EQ SPD AS SHOWN ON Ø5.875(149.23)B.C.	8.61(218.7)Max	10.61(269.5)	ø 4.500(114.30) 4.499(114.27)	□ 5.00(127.0)
MPM1141***7***	71(2.8)Max	38.0(1.5)	Ø9.18(.362)THRU (4)EQ SPD AS SHOWN ON Ø130.00(5.118)B.C.	218.2(8.59)Max	269.0(10.59)	ø 110.01(4.331) 109.98(4.330)	□ 114.3(4.50)
MPM1142***6***	2.8(71)Max	1.5(38.0)	3/8-16UNC-2B THRU (4)EQ SPD AS SHOWN ON Ø5.875(149.23)B.C.	11.11(282.2)Max	13.11(333.0)	ø 4.500(114.30) 4.499(114.27)	□ 5.00(127.0)
MPM1142***7***	71(2.8)Max	38.0(1.5)	Ø9.18(.362)THRU (4)EQ SPD AS SHOWN ON Ø130.00(5.118)B.C.	281.7(11.09)Max	332.5(13.09)	ø 110.01(4.331) 109.98(4.330)	□ 114.3(4.50)
MPM1143***6***	2.8(71)Max	1.5(38.0)	3/8-16UNC-2B THRU (4)EQ SPD AS SHOWN ON Ø5.875(149.23)B.C.	13.61(345.7)Max	15.61(396.5)	ø 4.500(114.30) 4.499(114.27)	□ 5.00(127.0)
MPM1143***7***	71(2.8)Max	38.0(1.5)	Ø9.18(.362)THRU (4)EQ SPD AS SHOWN ON Ø130.00(5.118) B.C.	345.2(13.59)Max	396.0(15.59)	ø 110.01(4.331) 109.98(4.330)	□ 114.3(4.50)

English = 6 Units: in (mm)
Metric = 7 Units: mm (in)

For Mechanical Dimensions on Termination Option 2 Consult Factory.

Custom Designed Servo Motors For Your Specific Application. Call 1-800-358-9070 Today.

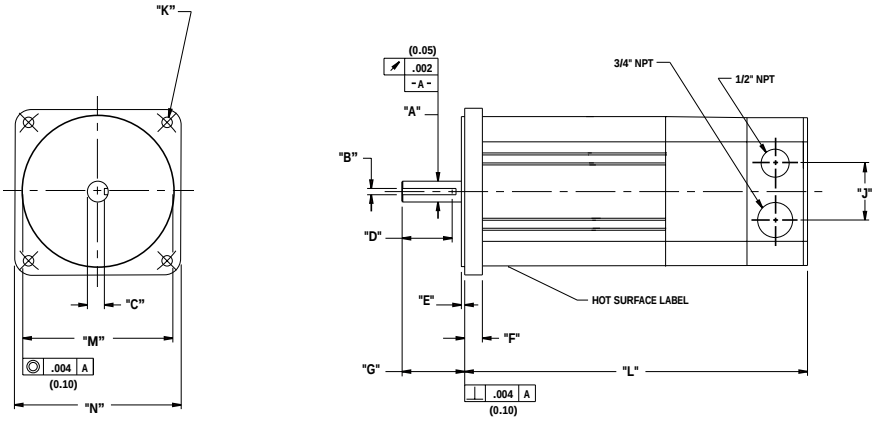

4" (114) English and Metric NPT Termination-Option 3 Motors

Model	"A"	"B"	"C"	"D"	"E"	"F"	"G"
MPM1141*6***	ø .6245(15.862) .6241(15.852)	.1890 (4.801) .1875 (4.763)	.509 (12.93)	1.5 (38.1) Min	.10 (2.5)	.53 (13.5)	1.90 (48.2) 1.86 (47.1)
MPM1141*7***	ø 18.999 (.7480) 18.987 (.7475)	5.99 (.236) 5.97 (.235)	15.49(.610)	37.0 (1.46) Min	3.0 (.12)	13.0 (.51)	50.5 (1.99) 49.5 (1.95)
MPM1142*6***	ø .8750 (22.225) .8745 (22.212)	.1890 (4.801) .1875 (4.763)	.774 (19.65)	1.5 (38.1) Min	.10 (2.5)	.53 (13.5)	1.90 (48.2) 1.86 (47.1)
MPM1142*7***	ø 24.000 (.9449) 23.988 (.9444)	7.998 (.3149) 7.963 (.3135)	19.90 (.784)	37.0 (1.46) Min	3.0 (.12)	13.0 (.51)	50.5 (1.99) 49.5 (1.95)
MPM1143*6***	ø .8750 (22.225) .8745 (22.212)	.1890 (4.801) .1875 (4.763)	.774 (19.65)	1.5 (38.1) Min	.10 (2.5)	.53 (13.5)	1.90 (48.2) 1.86 (47.1)
MPM1143*7***	ø 24.000 (.9449) 23.988 (.9444)	7.998 (.3149) 7.963 (.3135)	19.90 (.784)	37.0 (1.46) Min	3.0 (.12)	13.0 (.51)	50.5 (1.99) 49.5 (1.95)

Model	"J"	"K"	"L"	"L" w/ Brake	"M"	"N"
MPM1141*6***	1.71(43.4)	3/8-16UNC-2B THRU (4) EQ SPD AS SHOWN ON Ø5.875(149.23) B.C.	10.30 (261.6) Max	12.30 (312.42)	ø 4.500 (114.30) 4.499 (114.27)	□ 5.00 (127.0)
MPM1141*7***	43.4(1.71)	Ø9.18(.362)THRU (4) EQ SPD AS SHOWN ON Ø130.00(5.118) B.C.	261.0 (10.28) Max	311.9 (12.28)	ø 110.00(4.331) 109.98(4.330)	□ 114.3 (4.50)
MPM1142*6***	1.71(43.4)	3/8-16UNC-2B THRU (4) EQ SPD AS SHOWN ON Ø5.875(149.23) B.C.	12.80 (325.1) Max	14.80 (375.92)	ø 4.500 (114.30) 4.499 (114.27)	□ 5.00 (127.0)
MPM1142*7***	43.4(1.71)	Ø9.18(.362)THRU (4) EQ SPD AS SHOWN ON Ø130.00(5.118) B.C.	324.5 (12.78) Max	375.4 (14.78)	ø 110.00(4.331) 109.98(4.330)	□ 114.3 (4.50)
MPM1143*6***	1.71(43.4)	3/8-16UNC-2B THRU (4) EQ SPD AS SHOWN ON Ø5.875(149.23) B.C.	15.30 (388.6) Max	17.30 (439.42)	ø 4.500 (114.30) 4.499 (114.27)	□ 5.00 (127.0)
MPM1143*7***	43.4(1.71)	Ø9.18(.362)THRU (4) EQ SPD AS SHOWN ON Ø130.00(5.118) B.C.	388.0 (15.28) Max	438.9 (17.28)	ø 110.00 (4.331) 109.98 (4.330)	□ 114.3 (4.50)

English = 6 Units: in (mm)
Metric = 7 Units: mm (in)

For Mechanical Dimensions on Termination Option 2 Consult Factory.

4" Motor with Resolver Feedback

Option 1

Motor Connector 270-00026 (PT02E-14-5P(027))

Pin	Function
A	ϕR
B	ϕS
C	ϕT
D	PE GND
E	-

Resolver Connector 270-00024 (PT02E-14-18P(027))

Pin	Function
U	THERM
N	THERM
H	SIN
G	COS GND
S	COS
F	SIN GND
R	REF GND
E	REF
D	RES SHLD
P	GND
A	-
B	-
C	-
J	-
K	-
L	-
M	-
T	-

*** Option 1 with brake**

Motor Brake Connector 270-00032 (PT02E-16-8P(027))

Pin	Function
A	ϕR
B	ϕS
C	ϕT
D	PE GND
E	BRK SHLD
F	BRK (+)
G	BRK (–)
H	-

Option 2

Motor Brake Connector 270-00256 (BEGA0589NN0000009000)

Pin	Function
1	ϕR (U1)
2	PE GND
3	ϕT (W1)
4	ϕS (V1)
*A	BRK (+)
*B	BRK (–)
C	THERM
D	THERM

*USE ONLY WITH BRAKE OPTION

Resolver Connector 270-00257 (AEGA052NN00000013000)

Pin	Function
1	-
2	REF (R1)
3	REF GND (R2)
4	COS GND (S1)
5	COS (S3)
6	SIN (S2)
7	SIN GND (S4)
8	-
9	-
10	-
11	-
12	-

Option 3

Connection Chart (NPT) Resolver

Terminal	Function	
R	ϕR	TB3 (MOTOR CONN)
S	ϕS	
T	ϕT	
GND	PE GND	
*S11	BRK (+)	TB2 (BRAKE CONN)
*S10	BRK (–)	
S9	REF GND	TB1 (RESOLVER & THERM CONN)
S8	REF	
S7	SIN	
S6	COS	
S5	COS GND	
S4	SIN GND	
S3	THERM	
S2	THERM	
S1	RES SHLD	

*USE ONLY WITH BRAKE OPTION

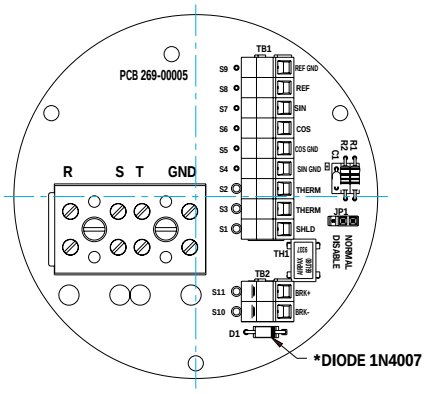

Custom Designed Servo Motors For Your Specific Application. Call 1-800-358-9070 Today.

4" Motor with Encoder Feedback

Option 1

Motor Connector 270-00026 (PT02E-14-5P(027))

Pin	Function
A	ϕR
B	ϕS
C	ϕT
D	PE GND
E	-

Encoder Connector 270-00024 (PT02E-14-18P(027))

Pin	Function
T	GND
K	+5VDC
B	CH A
C	CH A\
N	CH B
P	CH B\
M	CH Z
U	CH Z\
E	CH U
R	CH U\
F	CH V
S	CH V\
G	CH W
H	CH W\
D	GND/CABLE
A	THERM
L	THERM
J	GND

Option 1 with brake

Motor Brake Connector 270-00032 (PT02E-16-8P(027))

Pin	Function
A	ϕR
B	ϕS
C	ϕT
D	PE GND
E	BRK SHLD
F	BRK (+)
G	BRK (–)
H	-

Option 3-Consult Factory

Option 2

Motor Brake Connector 270-00256 (BEGA089NN00000013000)

Pin	Function
1	ϕR (U1)
2	PE GND
3	ϕT (W1)
4	ϕS (V1)
*A	BRK (+)
*B	BRK (–)
C	THERM
D	THERM

*USE ONLY WITH BRAKE OPTION

Encoder Connector 270-00257 (AEGA052NN00000013000)

Pin	Function
1	GND (OV)
2	CH A\ (A)
3	CH A (A\)
4	CH B (B)
5	CH B\ (B\)
6	CH Z (Z)
7	CH Z\ (Z\)
8	+5V (+5V)
9	-
10	CH U (RLGU)
11	CH V (RLGV)
12	CH W (RLGW)

6” Frame Brushless Servo Motors

Motor Data (Sine)

Motor Parameters		Units	1421ASG****	1421BSG***	1422ASG****
Horsepower	Hp Rated	Hp	4.4	2.8	6.8
Kilowatts	KW Rated	KW	3.3	2.1	5.1
Max. Operating Speed	N Max	RPM	2700	1750	2700
Speed @ Rated Torque	N Rated	RPM	2400	1500	2400
***Continuous Rated Torque @ Rated Speed**		IN-LBS[Nm]	115.0[13.0]	120.0[13.5]	179.0[20.2]
***Continuous Stall Torque**		IN-LBS[Nm]	130.0[14.7]	130.0[14.7]	210.0[23.7]
Continuous Line Current		AMPS(RMSϕ)	11.6	6.9	18.7
Peak Torque	Tpk	IN-LBS[Nm]	390.0[43.9]	390.0[43.9]	630.0[70.8]
Peak Current		AMPS(RMSϕ)	33.9	20.9	56.3
Max. Theoretical Accel.		RAD/SEC^2	36,792	36,792	33,511
Torque Sensitivity	Kt	IN-LBS/AMP (RMS/ϕ)[Nm/AMP (RMS/ϕ)]	11.2[1.26]	18.8[2.06]	11.2[1.26]
Back EMF (Line to Line)	±10%	Vrms/Krpm	70.0	115.0	70.0
D.C.Resistance (P-P)	±10%	OHMS	.66	1.7	.24
Inductance (P-P)	±10%	MILLIHENRIES	4.7	12.6	2.0
Rotor Inertia	Jm	IN-LBS-SEC^2[Kg-M^2]	.0106 [.00119]	.0106 [.00119]	.0188 [.00212]
Static Friction	Tf	IN-LBS[Nm]	2.4[0.27]	2.4[.27]	3.0[0.34]
Motor Weight		LBS[Kg]	36.0[16.3]	36.0[16.3]	51.0[23.1]
Line Voltage		VAC	230	230	230

Motor Parameters		Units	1422BSG****	1423ASG****	1423BSG****	1424ASG****	1424BSG****
Horsepower	Hp Rated	Hp	4.5	9.1	6.0	10.2	7.6
Kilowatts	KW Rated	KW	3.4	6.8	4.5	7.6	5.7
Max. Operating Speed	N Max	RPM	1750	2700	1750	2400	1750
Speed @ Rated Torque	N Rated	RPM	1500	2400	1500	2100	1500
***Continuous Rated Torque @ Rated Speed**		IN-LBS[Nm]	190.0[21.3]	238.0[26.9]	252.0[28.2]	306.0[34.6]	320.0[36.0]
***Continuous Stall Torque**		IN-LBS[Nm]	210.0[23.7]	280.0[31.5]	280.0[31.5]	360.0[40.7]	360.0[40.7]
Continuous Line Current		AMPS(RMS/ϕ)	11.2	25.0	14.9	24.0	19.2
Peak Torque	Tpk	IN-LBS[Nm]	630.0[70.8]	840.0[94.4]	840.0[94.4]	1081.0[122.2]	1081.0[122.2]
Peak Current		AMPS(RMS/ϕ)	33.5	75.2	44.7	72.1	57.5
Max. Theoretical Accel.		RAD/SEC^2	33,511	30,769	30,769	30,710	30,710
Torque Sensitivity	Kt	IN-LBS/AMP (RMS/ϕ)[Nm/AMP (RMS/ϕ)]	18.2[2.06]	11.2[1.26]	18.2[2.06]	15.0[1.70]	18.2[2.06]
Back EMF (Line to Line)	±10%	Vrms/Krpm	115.0	70.0	115.0	93.0	115.0
D.C.Resistance (P-P)	±10%	OHMS	.72	.13	.45	.18	.26
Inductance (P-P)	±10%	MILLIHENRIES	6.1	1.4	4.3	1.7	2.9
Rotor Inertia	Jm	IN-LBS-SEC^2 [Kg-M^2]	.0188[.00212]	.0273[.00308]	.0273[.00308]	.0352[.00397]	.0352[.00397]
Static Friction	Tf	IN-LBS[Nm]	3.0[0.34]	3.6[0.41]	3.6[0.41]	4.2[0.47]	4.2[0.47]
Motor Weight		LBS[Kg]	51.0[23.1]	66.0[29.9]	66.0[29.9]	83.0[37.7]	83.0[37.7]
Line Voltage		VAC	230	230	230	230	230

Brake Info:

Min. Holding Torque: 360 IN-LBS
Input Voltage: 24VDC
Current : 1.13 AMPS
Inertia: .00227 IN-LB-SEC^2
Weight Added: 12 LBS

*25° C Ambient with a maximum case temperature of 100° C on motor. Motor mounted on a 12” x 12” x 1/2” aluminum heatsink. Thermostat in stator windings will open if winding temperature exceeds 155° C. This allows for an approximate +10% headroom in the continuous torque rating before thermostat opens.

Mechanical Notes:
1. Axial Load: 50 LBS. Max.
2. Radial Load: 150 LBS. Max. @ 1” from face
3. Motor Sealed to IP65

Custom Designed Servo Motors For Your Specific Application. Call 1-800-358-9070 Today.

Motor Data (Trap)

Motor Parameters		Units	1421ATG****	1421BTG****	1422ATG****	1422BTG****
Horsepower	Hp Rated	Hp	4.4	2.9	6.8	4.5
Kilowatts	KW Rated	KW	3.2	2.1	5.1	3.4
Max. Operating Speed	N Max	RPM	2700	1750	2700	1750
Speed @ Rated Torque	N Rated	RPM	2400	1500	2400	1500
***Continuous Rated Torque @ Rated Speed**		IN-LBS[Nm]	115.0 [13.0]	120.0 [13.5]	179.0 [20.2]	190.0 [21.3]
***Continuous Stall Torque**		IN-LBS[Nm]	130.0 [14.7]	130.0 [14.7]	210.0 [23.7]	210.0 [23.7]
Continuous Line Current		AMPS	16.9	9.8	26.5	15.8
Peak Torque	Tpk	IN-LBS[Nm]	390.0 [43.9]	390.0 [43.9]	630.0 [70.8]	630.0 [70.8]
Peak Current		AMPS	48.0	29.6	79.6	47.4
Max. Theoretical Accel.		RAD/SEC^2	36,792	36,792	33,511	33,511
Torque Sensitivity	Kt	IN-LBS/AMP[Nm/AMP]	7.9 [0.89]	12.9 [1.46]	7.9 [0.89]	12.9 [1.46]
Back EMF (Line to Line)	±10%	Vrms/Krpm	70.0	115.0	70.0	115.0
D.C.Resistance (P-P)	±10%	OHMS	.66	1.7	.24	.72
Inductance (P-P)	±10%	MILLIHENRIES	4.7	12.6	2.0	6.1
Rotor Inertia	Jm	IN-LBS-SEC^2[Kg-M^2]	.0106 [.00119]	.0106 [.00119]	.0188 [.00212]	.0188 [.00212]
Static Friction	Tf	IN-LBS[Nm]	2.4 [0.27]	2.4 [0.27]	3.0 [0.34]	3.0 [0.34]
Motor Weight		LBS[Kg]	36.0 [16.3]	36.0 [16.3]	51.0 [23.1]	51.0 [23.1]
Line Voltage		VAC	230	230	230	230

Motor Parameters		Units	1423ATG****	1423BTG****	1424ATG****	1424BTG****
Horsepower	Hp Rated	Hp	9.1	6.0	10.2	7.6
Kilowatts	KW Rated	KW	6.8	4.5	7.6	5.7
Max. Operating Speed	N Max	RPM	2700	1750	2400	1750
Speed @ Rated Torque	N Rated	RPM	2400	1500	2100	1500
***Continuous Rated Torque @ Rated Speed**		IN-LBS[Nm]	238.0 [26.9]	252.0 [28.2]	306.0 [34.6]	320.0 [36.0]
***Continuous Stall Torque**		IN-LBS[Nm]	280.0 [31.5]	280.0 [31.5]	360.0 [40.7]	360.0 [40.7]
Continuous Line Current		AMPS	35.4	21.1	34.0	27.1
Peak Torque	Tpk	IN-LBS[Nm]	840.0 [94.4]	840.0 [94.4]	1081.0 [122.2]	1081.0 [122.2]
Peak Current		AMPS	106.3	63.2	102.0	81.3
Max. Theoretical Accel.		RAD/SEC^2	30,769	30,769	30,710	30,710
Torque Sensitivity	Kt	IN-LBS/AMP[Nm/AMP]	7.9 [0.89]	12.9 [1.46]	10.4 [1.2]	12.9 [1.46]
Back EMF (Line to Line)	±10%	Vrms/Krpm	70.0	115.0	93.0	115.0
D.C.Resistance (P-P)	±10%	OHMS	.13	.45	18	.26
Inductance (P-P)	±10%	MILLIHENRIES	1.4	4.3	1.7	2.9
Rotor Inertia	Jm	IN-LBS-SEC^2[Kg-M^2]	.0273 [.00308]	.0273 [.00308]	.0352 [.00397]	.0352 [.00397]
Static Friction	Tf	IN-LBS[Nm]	3.6 [0.41]	3.6 [0.41]	4.2 [0.47]	4.2 [0.47]
Motor Weight		LBS[Kg]	66.0 [29.9]	66.0 [29.9]	83.0 [37.7]	83.0 [37.7]
Line Voltage		VAC	230	230	230	230

Brake Info:

Min. Holding Torque: 360IN-LBS
Input Voltage: 24VDC
Current : 1.13AMPS
Inertia: .00227IN-LB-SEC^2
Weight Added: 12LBS

*25° C Ambient with a maximum case temperature of 100° C on motor. Motor mounted on a 12" x 12" x 1/2" aluminum heatsink. Thermostat in stator windings will open if winding temperature exceeds 155° C. This allows for an approximate +10% headroom in the continuous torque rating before thermostat opens.

Mechanical Notes:

1. Axial Load: 50 LBS. Max.
2. Radial Load: 150 LBS. Max. @ 1" from face
3. Motor Sealed to IP65

Motor Data (Sine)

Motor Parameters		Units	1421CSJ****	1421DSJ****	1422CSJ****	1422DSJ****
Horsepower	Hp Rated	Hp	4.9	2.9	7.5	4.5
Kilowatts	KW Rated	KW	3.6	2.1	5.7	3.4
Max. Operating Speed	N Max	RPM	3400	1750	3400	1750
Speed @ Rated Torque	N Rated	RPM	2800	1500	2800	1500
***Continuous Rated Torque @ Rated Speed**		IN-LBS[Nm]	110.0[12.4]	120.0[13.5]	170.0[19.2]	190.0[21.3]
***Continuous Stall Torque**		IN-LBS[Nm]	130.0[14.7]	130.0[14.7]	210.0[23.7]	210.0[23.7]
Continuous Line Current		AMPS(RMS/ϕ)	4 6.9	3.5	11.2	5.6
Peak Torque	Tpk	IN-LBS[Nm]	390.0[43.9]	390.0[43.9]	630.0[70.8]	630.0[70.8]
Peak Current		AMPS(RMS/ϕ)	20.9	10.5	335	16.8
Max. Theoretical Accel.		RAD/SEC^2	36,792	36,792	33,511	33,511
Torque Sensitivity	Kt	IN-LBS/AMP (RMS/ϕ)[Nm/AMP (RMS/ϕ)]	18.2[2.1]	36.5[4.1]	18.2[2.1]	36.5[4.1]
Back EMF (Line to Line)	±10%	Vrms/Krpm	115.0	230.0	115.0	230.0
D.C.Resistance (P-P)	±10%	OHMS	1.9	7.1	.68	2.5
Inductance (P-P)	±10%	MILLIHENRIES	13.0	52.3	5.6	23.0
Rotor Inertia	Jm	IN-LBS-SEC^2[Kg-M^2]	.0106[.00119]	.0106[.00119]	.0188[.00212]	.0188[.00212]
Static Friction	Tf	IN-LBS[Nm]	2.4[0.27]	2.4[0.27]	3.0[0.34]	3.0[0.34]
Motor Weight		LBS[Kg]	36.0[16.3]	36.0[16.3]	51.0[23.1]	51.0[23.1]
Line Voltage		VAC	460	460	460	460

Motor Parameters		Units	1423CSJ****	1423DSJ****	1424CSJ****	1424DSJ****
Horsepower	Hp Rated	Hp	9.8	6.0	12.4	7.6
Kilowatts	KW Rated	KW	7.3	4.5	9.3	5.7
Max. Operating Speed	N Max	RPM	3400	1750	3400	1750
Speed @ Rated Torque	N Rated	RPM	2800	1500	2800	1500
***Continuous Rated Torque @ Rated Speed**		IN-LBS[Nm]	220.0[24.8]	252.0[28.2]	280.0[31.6]	320.0[36.0]
***Continuous Stall Torque**		IN-LBS[Nm]	280.0[31.5]	280.0[31.5]	360.0[40.7]	360.0[40.7]
Continuous Line Current		AMPS(RMS/ϕ)	14.	7.5	19.2	9.6
Peak Torque	Tpk	IN-LBS[Nm]	840.0[94.4]	840.0[94.4]	1081.0[122.2]	1081.0[122.2]
Peak Current		AMPS(RMS/ϕ)	44.7	22.3	57.5	28.7
Max. Theoretical Accel.		RAD/SEC^2	30,769	30,769	30,710	30,710
Torque Sensitivity	Kt	IN-LBS/AMP (RMS/ϕ)[Nm/AMP (RMS/ϕ)]	18.2[2.1]	36.5[4.1]	18.2[2.1]	36.5[4.1]
Back EMF (Line to Line)	±10%	Vrms/Krpm	115.0	230.0	115.0	2300
D.C.Resistance (P-P)	±10%	OHMS	45	1.7	26	1.2
Inductance (P-P)	±10%	MILLIHENRIES	4.3	16.9	2.9	11.1
Rotor Inertia	Jm	IN-LBS-SEC^2 [Kg-M^2]	.0273[.00308]	.0273[.00308]	.0352[.00397]	.0352[.00397]
Static Friction	Tf	IN-LBS[Nm]	3.6[0.41]	3.6[0.41]	4.2[0.47]	4.2[0.47]
Motor Weight		LBS[Kg]	66.0[29.9]	66.0[29.9]	83.0[37.7]	83.0[37.7]
Line Voltage		VAC	460	460	460	460

Brake Info:

Min. Holding Torque: 360 IN-LBS
Input Voltage: 24VDC
Current : 1.13 AMPS
Inertia: .00227 IN-LB-SEC^2
Weight Added: 12 LBS

*25° C Ambient with a maximum case temperature of 100° C on motor. Motor mounted on a 12" x 12" x 1/2" aluminum heatsink. Thermostat in stator windings will open if winding temperature exceeds 155° C. This allows for an approximate +10% headroom in the continuous torque rating before thermostat opens.

Mechanical Notes:
1. Axial Load: 50 LBS. Max.
2. Radial Load: 150 LBS. Max. @ 1" from face
3. Motor Sealed to IP65

Custom Designed Servo Motors For Your Specific Application. Call 1-800-358-9070 Today.

Motor Data (Trap)

Motor Parameters		Units	1421CTJ****	1421DTJ****	1422CTJ****	1422DTJ****
Horsepower	Hp Rated	Hp	4. 9	2.9	7.5	4.5
Kilowatts	KW Rated	KW	3.6	2.1	5.7	3.4
Max. Operating Speed	N Max	RPM	3400	1750	3400	1750
Speed @ Rated Torque	N Rated	RPM	2800	1500	2800	1500
***Continuous Rated Torque @ Rated Speed**		IN-LBS[Nm]	110.0[12.4]	120.0[13.5]	170.0[19.2]	190.0[21.3]
***Continuous Stall Torque**		IN-LBS[Nm]	130.0[14.7]	130.0[14.7]	210.0[23.7]	210.0[23.7]
Continuous Line Current		AMPS	9.8	4.9	15.8	7.9
Peak Torque	Tpk	IN-LBS[Nm]	390.0[43.9]	390.0[43.9]	630.0[70.8]	630.0[70.8]
Peak Current		AMPS	29.6	14.8	47.4	23.7
Max. Theoretical Accel.		RAD/SEC^2	36,792	36,792	33,511	33,511
Torque Sensitivity	Kt	IN-LBS/AMP[Nm/AMP]	12.9[1.46]	25.8[2.92]	12.9[1.46]	25.8[2.92]
Back EMF (Line to Line)	±10%	Vrms/Krpm	115.0	230.0	115.0	230.0
D.C.Resistance (P-P)	±10%	OHMS	1.9	7. 1	.68	2.5
Inductance (P-P)	±10%	MILLIHENRIES	13.0	52.3	5.6	23.0
Rotor Inertia	Jm	IN-LBS-SEC^2[Kg-M^2]	.0106[.00119]	.0106[.00119]	.0188[.00212]	.0188[.00212]
Static Friction	Tf	IN-LBS[Nm]	2.4[0.27]	2.4[0.27]	3.0[0.34]	3.0[0.34]
Motor Weight		LBS[Kg]	36.0[16.3]	36.0[16.3]	51.0[23.1]	51.0[23.1]
Line Voltage		VAC	460	460	460	460

Motor Parameters		Units	1423CTJ****	1423DTJ****	1424CTJ****	1424DTJ****
Horsepower	Hp Rated	Hp	9.8	6.0	12.4	7.6
Kilowatts	KW Rated	KW	7.3	4.5	9.3	5.7
Max. Operating Speed	N Max	RPM	3400	1750	3400	1750
Speed @ Rated Torque	N Rated	RPM	2800	1500	2800	1500
***Continuous Rated Torque @ Rated Speed**		IN-LBS[Nm]	220.0[24.8]	252.0[28.2]	280.0[31.6]	320.0[36.0]
***Continuous Stall Torque**		IN-LBS[Nm]	280.0[31.5]	280.0[31.5]	360.0[40.7]	360.0[40.7]
Continuous Line Current		AMPS	21.1	10.6	27.1	13.6
Peak Torque	Tpk	IN-LBS[Nm]	840.0[94.4]	840.0[94.4]	1081.0[122.2]	1081.0[122.2]
Peak Current		AMPS	63.2	31.6	81.3	40.6
Max. Theoretical Accel.		RAD/SEC^2	30,769	30,769	30,710	30,710
Torque Sensitivity	Kt	IN-LBS/AMP[Nm/AMP]	12.9[1.46]	25.8[2.92]	12.9[1.46]	25.8[2.92]
Back EMF (Line to Line)	±10%	Vrms/Krpm	115.0	230.0	115.0	2300
D.C.Resistance (P-P)	±10%	OHMS	.45	1.7	.26	1.2
Inductance (P-P)	±10%	MILLIHENRIES	4.3	16.9	2.9	11.1
Rotor Inertia	Jm	IN-LBS-SEC^2[Kg-M^2]	.0273[.00308]	.0273[.00308]	.0352[.00397]	.0352[.00397]
Static Friction	Tf	IN-LBS[Nm]	3.6[0.41]	3.6[0.41]	4.2[0.47]	4.2[0.47]
Motor Weight		LBS[Kg]	66.0[29.9]	66.0[29.9]	83.0[37.7]	83.0[37.7]
Line Voltage		VAC	460	460	460	460

Brake Info:

Min. Holding Torque: 360 IN-LBS
Input Voltage: 24VDC
Current : 1.13 AMPS
Inertia: .00227 IN-LB-SEC^2
Weight Added: 12 LBS

*25° C Ambient with a maximum case temperature of 100° C on motor. Motor mounted on a 12" x 12" x 1/2" aluminum heatsink. Thermostat in stator windings will open if winding temperature exceeds 155° C. This allows for an approximate +10% headroom in the continuous torque rating before thermostat opens.

Mechanical Notes:
1. Axial Load: 50 LBS. Max.
2. Radial Load: 150 LBS. Max. @ 1" from face
3. Motor Sealed to IP65

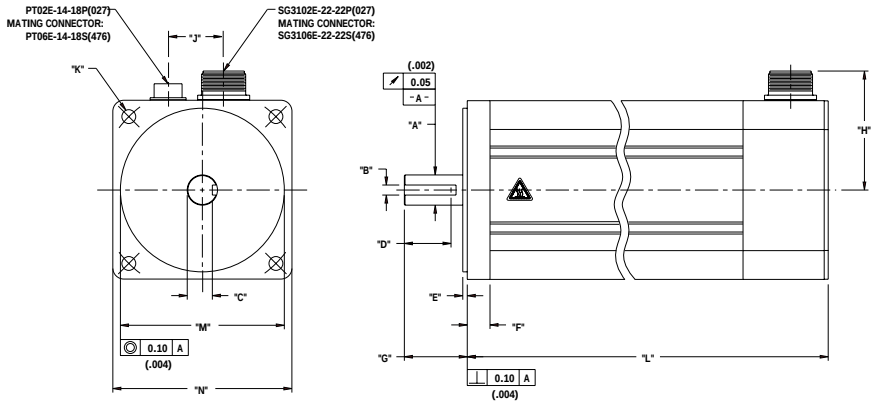

6" (142) English and Metric Connectorized Termination-Option 1 Motors

Model	"A"	"B"	"C"	"D"	"E"	"F"	"G"
MPM1421*6***	ø .8750(22.225) .8745(22.212)	.1890(4.801) .1875(4.763)	.774(19.66)	1.41(35.8) Min	.13 (3.2)	.73 (18.4)	1.97 (50.0) 1.93 (49.0)
MPM1421*7***	ø 24.000(.9449) 23.988(.9444)	7.998(.3149) 7.963(.3135)	19.91(.784)	37.0(1.46) Min	3.6 (.14)	18.0 (.71)	50.5 (1.99) 49.5 (1.95)
MPM1422*6***	ø .8750(22.225) .8745(22.212)	.1890(4.801) .1875(4.763)	.774(19.66)	1.41(35.8) Min	.13 (3.2)	.73 (18.4)	1.97 (50.0) 1.93 (49.0)
MPM1422*7***	ø 24.000(.9449) 23.988(.9444)	7.998(.3149) 7.963(.3135)	19.91(.784)	37.0(1.46) Min	3.6 (.14)	18.0 (.71)	50.5 (1.99) 49.5 (1.95)
MPM1423*6***	ø .8750(22.225) .8745(22.212)	.1890(4.801) .1875(4.763)	.774(19.66)	1.41(35.8) Min	.13 (3.2)	.73 (18.4)	1.97 (50.0) 1.93 (49.0)
MPM1423*7***	ø 31.999(1.2598) 31.986(1.2593)	10.000(.3937) 9.964(.3923)	26.90 (1.059)	37.0(1.46) Min	3.6 (.14)	18.0 (.71)	50.5 (1.99) 49.5 (1.95)
MPM1424*6***	ø .8750(22.225) .8745(22.212)	.1890(4.801) .1875(4.763)	.774(19.66)	1.41(35.8) Min	.13 (3.2)	.73 (18.4)	1.97 (50.0) 1.93 (49.0)
MPM1424*7***	ø 31.999(1.2598) 31.986(1.2593)	10.000(.3937) 9.964(.3923)	26.90 (1.059)	37.0(1.46) Min	3.6 (.14)	18.0 (.71)	50.5 (1.99) 49.5 (1.95)

Model	"H"	"J"	"K"	"L"	"L" w/ Brake	"M"	"N"
MPM1421*6***	3.7(95)Max	1.74(44.1)	3/8-16UNC-2BTHRU (4)EQ SPD AS SHOWN ON Ø5.875(149.22) B.C.	11.31(287.3)Max	14.01 (355.9)Max	ø 4.500 (114.30) 4.499 (114.27)	☐ 5.59 (142.0)
MPM1421*7***	95 (3.7)Max	44.1(1.74)	Ø11.00(.433)THRU (4)EQ SPD AS SHOWN ON Ø165.00(6.496) B.C.	286.8(11.29)Max	355.3 (13.99)Max	ø 130.00(5.118) 129.97(5.117)	☐ 142.0 (5.59)
MPM1422*6***	3.7(95)Max	1.74(44.1)	3/8-16UNC-2BTHRU (4)EQ SPD AS SHOWN ON Ø5.875(149.22) B.C.	14.01(355.9)Max	16.71 (424.4)Max	ø 4.500(114.30) 4.499(114.27)	☐ 5.59(142.0)
MPM1422*7***	95 (3.7)Max	44.1(1.74)	Ø11.00(.433)THRU (4)EQ SPD AS SHOWN ON Ø165.00(6.496) B.C.	355.3(13.99)Max	423.9 (16.69)Max	ø 130.00(5.118) 129.97(5.117)	☐ 142.0 (5.59)
MPM1423*6***	3.7(95)Max	1.74(44.1)	3/8-16UNC-2BTHRU (4)EQ SPD AS SHOWN ON Ø5.875(149.22) B.C.	16.71(424.4)Max	19.41 (493.0)Max	ø 4.500(114.30) 4.499(114.27)	☐ 5.59 (142.0)
MPM1423*7***	95 (3.7)Max	44.1(1.74)	Ø11.00(.433)THRU (4)EQ SPD AS SHOWN ON Ø165.00(6.496) B.C.	423.9(16.69)Max	492.5 (19.39)Max	ø 130.00(5.118) 129.97(5.117)	☐ 142.0 (5.59)
MPM1424*6***	3.7(95)Max	1.74(44.1)	3/8-16UNC-2BTHRU (4)EQ SPD AS SHOWN ON Ø5.875(149.22) B.C.	19.41(493.0)Max	22.11 (561.6)Max	ø 4.500(114.30) 4.499(114.27)	☐ 5.59 (142.0)
MPM1424*7***	95 (3.7)Max	44.1(1.74)	Ø11.00(.433)THRU (4)EQ SPD AS SHOWN ON Ø165.00(6.496) B.C.	492.5(19.39)Max	561.1 (22.09)Max	ø 130.00(5.118) 129.97(5.117)	☐ 142.0 (5.59)

English = 6 Units: in (mm)
Metric = 7 Units: mm (in)

For Mechanical Dimensions on Termination Option 2 Consult Factory.

Custom Designed Servo Motors For Your Specific Application. Call 1-800-358-9070 Today.

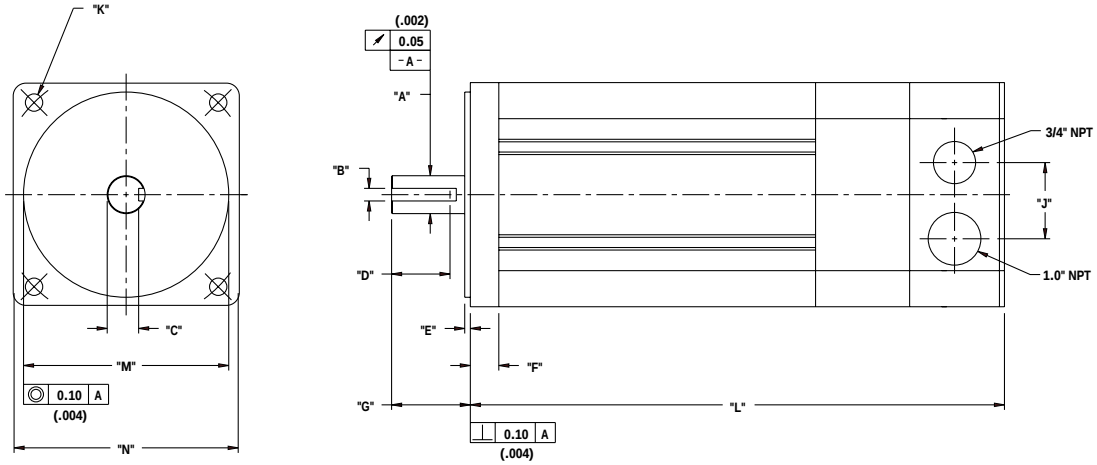

6" (142) English and Metric NPT Termination-Option 3 Motors

Model	"A"	"B"	"C"	"D"	"E"	"F"	"G"
MPM1421***6***	ø .8750(22.225) .8745(22.212)	.1890(4.801) .1875(4.763)	.774(19.66)	1.41(35.8) Min	.13(3.2)	.73(18.4)	1.97(50.0) 1.93(49.0)
MPM1421***7***	ø 24.000(.9449) 23.988(.9444)	7.998(.3149) 7.963(.3135)	19.91(.784)	37.0(1.46) Min	3.6(.14)	18.0(.71)	50.4(1.98) 49.4(1.94)
MPM1422***6***	ø .8750(22.225) .8745(22.212)	.1890(4.801) .1875(4.763)	.774(19.66)	1.41(35.8) Min	.13(3.2)	.73(18.4)	1.97(50.0) 1.93(49.0)
MPM1422***7***	ø 24.000(.9449) 23.988(.9444)	7.998(.3149) 7.963(.3135)	19.91(.784)	37.0(1.46) Min	3.6(.14)	18.0(.71)	50.4(1.98) 49.4(1.94)
MPM1423***6***	ø .8750(22.225) .8745(22.212)	.1890(4.801) .1875(4.763)	.774(19.66)	1.41(35.8) Min	.13(3.2)	.73(18.4)	1.97(50.0) 1.93(49.0)
MPM1423***7***	ø31.999(1.2598) 31.986(1.2593)	10.000(.3937) 9.964(.3923)	26.90(1.059)	37.0(1.46) Min	3.6(.14)	18.0(.71)	50.4(1.98) 49.4(1.94)
MPM1424***6***	ø .8750(22.225) .8745(22.212)	.1890(4.801) .1875(4.763)	.774(19.66)	1.41(35.8) Min	.13(3.2)	.73(18.4)	1.97(50.0) 1.93(49.0)
MPM1424***7***	ø31.999(1.2598) 31.986(1.2593)	10.000(.3937) 9.964(.3923)	26.90(1.059)	37.0(1.46) Min	3.6(.14)	18.0(.71)	50.4(1.98) 49.4(1.94)

Model	"J"	"K"	"L"	"L" w/ Brake	"M"	"N"
MPM1421***6***	1.90(48.3)	3/8-16UNC-2BTHRU (4)EQ SPD AS SHOWN ON Ø5.875(149.22) B.C.	13.37(339.6) Max	16.07(408.2) Max	ø 4.500(114.30) 4.499(114.27)	☐ 5.59(142.0)
MPM1421***7***	48.3(1.90)	Ø11.00(.433)THRU (4)EQ SPD AS SHOWN ON Ø165.00(6.496) B.C.	339.0(13.35) Max	408.0(16.05) Max	ø 130.00(5.118) 129.97(5.117)	☐ 142.0(5.59)
MPM1422***6***	1.90(48.3)	3/8-16UNC-2BTHRU (4)EQ SPD AS SHOWN ON Ø5.875(149.22) B.C.	16.07(408.2) Max	18.77(476.8) Max	ø 4.500(114.30) 4.499(114.27)	☐ 5.59(142.0)
MPM1422***7***	48.3(1.90)	Ø11.00(.433)THRU (4)EQ SPD AS SHOWN ON Ø165.00(6.496) B.C.	408.0(16.05) Max	477.0(18.75) Max	ø 130.00(5.118) 129.97(5.117)	☐ 142.0(5.59)
MPM1423***6***	1.90(48.3)	3/8-16UNC-2BTHRU (4)EQ SPD AS SHOWN ON Ø5.875(149.22) B.C.	18.77(476.8) Max	21.47(545.3) Max	ø 4.500(114.30) 4.499(114.27)	☐ 5.59(142.0)
MPM1423***7***	48.3(1.90)	Ø11.00(.433)THRU (4)EQ SPD AS SHOWN ON Ø165.00(6.496) B.C.	477.0(18.75) Max	546.0(21.45) Max	ø 130.00(5.118) 129.97(5.117)	☐ 142.0(5.59)
MPM1424***6***	1.90(48.3)	3/8-16UNC-2BTHRU (4)EQ SPD AS SHOWN ON Ø5.875(149.22) B.C.	21.47(545.3) Max	24.17(613.9) Max	ø 4.500(114.30) 4.499(114.27)	☐ 5.59(142.0)
MPM1424***7***	48.3(1.90)	Ø11.00(.433)THRU (4)EQ SPD AS SHOWN ON Ø165.00(6.496) B.C.	546.0(21.45) Max	613.3(24.15) Max	ø 130.00(5.118) 129.97(5.117)	☐ 142.0(5.59)

English = 6 Units: in (mm)
Metric = 7 Units: mm (in)

For Mechanical Dimensions on Termination Option 2 Consult Factory.

6" Motor with Resolver Feedback

Option 1

Motor Connector 270-00017(SG3102E-22-22P(027))

Pin	Function
A	ϕR
B	ϕS
C	ϕT
D	PE GND

Resolver Connector 270-00024(PT02E-14-18P(027))

Pin	Function
U	THERM
N	THERM
H	SIN
G	COS GND
S	COS
F	SIN GND
R	REF GND
E	REF
D	RES SHLD
P	GND
*A	BRK (+)
*B	BRK (-)
*C	BRK SHLD
J	-
K	-
L	-
M	-
T	-

*USE ONLY WITH BRAKE OPTION

Option 2

Motor Connector 270-00325 (CEGA258NN00000001000)

Pin	Function
U	ϕR(U1)
V	ϕS(V1)
W	ϕT(W1)
PE	PE GND
*+	BRK (+)
*-	BRK (–)
1	THERM
2	THERM

*USE ONLY WITH BRAKE OPTION

Resolver Connector 270-00257(AEGA052NN00000013000)

Pin	Function
1	-
2	REF (R1)
3	REF GND (R2)
4	COS GND (S1)
5	COS (S3)
6	SIN (S2)
7	SIN GND (S4)
8	-
9	-
10	-
11	-
12	-

Option 3

Connection Chart (NPT) Resolver

Terminal	Function	
1	ϕR	TB3 (MOTOR CONN)
2	ϕS	
3	ϕT	
4	PE GND	
*S11	BRK (+)	TB2 (BRAKE CONN)
*S10	BRK (-)	
S9	REF GND	TB1 (RESOLVER & THERM CONN)
S8	REF	
S7	SIN	
S6	COS	
S5	COS GND	
S4	SIN GND	
S3	THERM	
S2	THERM	
S1	RES SHLD	

*USE ONLY WITH BRAKE OPTION

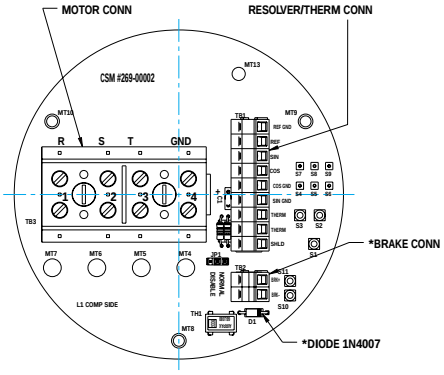

Custom Designed Servo Motors For Your Specific Application. Call 1-800-358-9070 Today.

Parker Automation
Parker Hannifin Corporation
Electromechanical Automation Division
parkermotion.com

6" Motor with Encoder Feedback

Option 1

Motor Connector 270-00017 (SG3102E-22-22P(027))

Pin	Function
A	ϕR
B	ϕS
C	ϕT
D	PE GND

Encoder Connector 270-00024 (PT02E-14-18P(027))

Pin	Function
T	GROUND
K	+5VDC
B	CH A
C	CH A\
N	CH B
P	CH B\
M	CH Z
U	CH Z\
E	CH U
R	CH U\
F	CH V
S	CH V\
G	CH W
H	CH W\
D	GND/CABLE
A	THERM
L	THERM
J	GND

Option 1 with brake

Encoder Brake Connector 270-00219 (PT02E-16-23P(027))

Pin	Function
T	GROUND
K	+5VDC
B	CH A
C	CH A\
N	CH B
P	CH B\
M	CH Z
U	CH Z\
E	CH U
R	CH U\
F	CH V
S	CH V\
G	CH W
H	CH W\
D	GND/CABLE
A	THERM
L	THERM
J	GND
V*	BRK (+)
W*	BRK (–)
X*	BRK SHLD
Y	-
Z	-

*** Use only with Brake option**

Option 2

Motor Connector 270-00325(CEGA258NN000000001000)

Pin	Function
U	ϕR(U1)
PE	PE GND
W	ϕS(W1)
V	ϕT(V1)
*+	BRK (+)
*–	BRK (–)
1	THERM
2	THERM

* USE ONLY WITH BRAKE OPTION

Motor Connector 270-00257 (AEGA052NN00000013000)

Pin	Function
1	GND(OV)
2	CH A\(A)
3	CH A(A\)
4	CH B(B)
5	CH B\(B\)
6	CH Z(Z)
7	CH Z\(Z\)
8	+5V(+5V)
9	-
10	CH U(RLG U)
11	CH V(RLG V)
12	CH W(RLG W)

Option 3-Consult Factory

8” Frame Brushless Servo Motors

Motor Data (Sine)

Motor Parameters		Units	1901ASG****	1901BSG****	1902ASG****
Horsepower	Hp Rated	Hp	6.0	3.0	11.9
Kilowatts	KW Rated	KW	4.5	2.2	8. 9
Max. Operating Speed	N Max	RPM	2500	1250	2500
Speed @ Rated Torque	N Rated	RPM	1800	750	2000
***Continuous Rated Torque @ Rated Speed**		IN-LBS[Nm]	209 [23.6]	250 [28.2]	375 [42.4]
***Continuous Stall Torque**		IN-LBS[Nm]	280 [31.9]	280 [31.6]	600 [67.8]
Continuous Line Current		AMPS	22.0	10.7	47.2
Peak Torque	Tpk	IN-LBS[Nm]	746 [84.3]	625 [70.6]	1800 [203.0]
Peak Current		AMPS	58.7	23.8	141.6
Max. Theoretical Accel.		RAD/SEC^2	18,195	15,244	23,077
Torque Sensitivity	Kt	IN-LBS/AMP[Nm/AMP]	12.7 [1.44]	26.21 [2.96]	12.71 [1.44]
Back EMF (Line to Line)	±10%	Vrms/Krpm	80	165	80
D.C.Resistance (P-P)	±10%	OHMS	.31	1.36	11
Inductance (P-P)	±10%	MILLIHENRIES	3.70	15.5	.65
Rotor Inertia	Jm	IN-LBS-SEC^2[Kg-M^2]	.0411[.00464]	.0411[.00464]	.0714[.00807]
Static Friction	Tf	IN-LBS[Nm]	8.2[.92]	8.2[.92]	9.8[1.1]
Motor Weight		LBS[Kg]	67[30.4]	67[30.4]	98[44.5]
Line Voltage		VAC	230	230	230

Motor Parameters		Units	1902BSG****	1904ASG****	1904BSG****
Horsepower	Hp Rated	Hp	6.7	17.5	10.8
Kilowatts	KW Rated	KW	5.0	13.0	8.0
Max. Operating Speed	N Max	RPM	1250	2250	1250
Speed @ Rated Torque	N Rated	RPM	850	2000	1000
***Continuous Rated Torque @ Rated Speed**		IN-LBS[Nm]	500 [56.5]	550 [62.1]	680 [76.8]
***Continuous Stall Torque**		IN-LBS[Nm]	600 [67.8]	820 [92.7]	820 [92.7]
Continuous Line Current		AMPS	23.5	58.7	32.1
Peak Torque	Tpk	IN-LBS[Nm]	1560 [176.3]	3000 [339.0]	3000 [339.0]
Peak Current		AMPS	61.0	214.5	117
Max. Theoretical Accel.		RAD/SEC^2	20,000	22,556	22,556
Torque Sensitivity	Kt	IN-LBS/AMP[Nm/AMP]	25.58 [2.89]	13.98 [1.58]	25.58 [2.89]
Back EMF (Line to Line)	±10%	Vrms/Krpm	161	88	161
D.C.Resistance (P-P)	±10%	OHMS	.44	.05	.19
Inductance (P-P)	±10%	MILLIHENRIES	6.8	.96	3.2
Rotor Inertia	Jm	IN-LBS-SEC^2[Kg-M^2]	.0714[.00807]	.133[.0150]	.133[.0150]
Static Friction	Tf	IN-LBS[Nm]	9.8[1.1]	13.0[1.5]	13.0[1.5]
Motor Weight		LBS[Kg]	98[44.5]	160[72.6]	160[72.6]
Line Voltage		VAC	230	230	230

Brake Info:

Min. Holding Torque: 90 FT-LBS
Input Voltage: 24VDC
Current : 1.4 AMPS
Inertia: .0085 IN-LB-SEC^2
Weight Adder: 18 LBS

*25° C Ambient with a maximum case temperature of 100° C on motor. Motor mounted on a 14” x 14” x 3/4” aluminum heatsink. Thermostat in stator windings will open if winding temperature exceeds 155° C. This allows for an approximate +10% headroom in the continuous torque rating before thermostat opens.

Mechanical Notes:
1. Axial Load: 100 LBS. Max.
2. Radial Load: 250 LBS. Max. @ 1” from face
3. Motor Sealed to IP65

Custom Designed Servo Motors For Your Specific Application. Call 1-800-358-9070 Today.

Motor Data (Trap)

Motor Parameters		Units	1901ATG****	1901BTG****	1902ATG****
Horsepower	Hp Rated	Hp	6.0	3.0	11.4
Kilowatts	KW Rated	KW	4.5	2.2	8. 9
Max. Operating Speed	N Max	RPM	2500	1250	2500
Speed @ Rated Torque	N Rated	RPM	1800	750	2000
***Continuous Rated Torque @ Rated Speed**		IN-LBS[Nm]	209 [23.6]	250 [28.2]	375 [42.4]
***Continuous Stall Torque**		IN-LBS[Nm]	280 [31.9]	280 [31.6]	600 [67.8]
Continuous Line Current		AMPS	31.15	15.10	66.7
Peak Torque	Tpk	IN-LBS[Nm]	746 [84.3]	625 [70.6]	1800 [203.0]
Peak Current		AMPS	82.98	33.71	200
Max. Theoretical Accel.		RAD/SEC^2	18,195	15,244	23,077
Torque Sensitivity	Kt	IN-LBS/AMP[Nm/AMP]	8.99 [1.02]	18.54 [2.09]	8.99 [10.02]
Back EMF (Line to Line)	±10%	Vrms/Krpm	80	165	80
D.C.Resistance (P-P)	±10%	OHMS	.31	1.36	11
Inductance (P-P)	±10%	MILLIHENRIES	3.70	15.5	1.65
Rotor Inertia	Jm	IN-LBS-SEC^2[Kg-M^2]	.0411[.00464]	.0411[.00464]	.0714[.00807]
Static Friction	Tf	IN-LBS[Nm]	8.2[.92]	8.2[.92]	9.8[1.1]
Motor Weight		LBS[Kg]	67[30.4]	67[30.4]	98[44.5]
Line Voltage		VAC	230	230	230

Motor Parameters		Units	1902BTG****	1904ATG****	1904BTG****
Horsepower	Hp Rated	Hp	6.7	17.5	10.8
Kilowatts	KW Rated	KW	5.0	13.0	8.0
Max. Operating Speed	N Max	RPM	1250	2250	1250
Speed @ Rated Torque	N Rated	RPM	850	2000	1000
***Continuous Rated Torque @ Rated Speed**		IN-LBS[Nm]	500 [56.5]	550 [62.1]	680 [76.8]
***Continuous Stall Torque**		IN-LBS[Nm]	600 [67.8]	820 [92.7]	820 [92.7]
Continuous Line Current		AMPS	33	82.9	45.3
Peak Torque	Tpk	IN-LBS[Nm]	1560 [176.3]	3000 [339.0]	3000 [339.0]
Peak Current		AMPS	86.2	303	166
Max. Theoretical Accel.		RAD/SEC^2	21,849	22,556	22,556
Torque Sensitivity	Kt	IN-LBS/AMP[Nm/AMP]	18.09 [2.04]	9.89 [1.12]	18.09 [2.04]
Back EMF (Line to Line)	±10%	Vrms/Krpm	161	88	161
D.C.Resistance (P-P)	±10%	OHMS	.44	.05	.19
Inductance (P-P)	±10%	MILLIHENRIES	6.8	.96	3.2
Rotor Inertia	Jm	IN-LBS-SEC^2[Kg-M^2]	.0714[.00807]	.133[.0150]	.133[.0150]
Static Friction	Tf	IN-LBS[Nm]	9.8[1.1]	13.0[1.5]	13.0[1.5]
Motor Weight		LBS[Kg]	98[44.5]	160[72.6]	160[72.6]
Line Voltage		VAC	230	230	230

Brake Info:

Min. Holding Torque: 90 FT-LBS
Input Voltage: 24VDC
Current : 1.4 AMPS
Inertia: .0085 IN-LB-SEC^2
Weight Adder: 18 LBS

*25° C Ambient with a maximum case temperature of 100° C on motor. Motor mounted on a 14" x 14" x 3/4" aluminum heatsink. Thermostat in stator windings will open if winding temperature exceeds 155° C. This allows for an approximate +10% headroom in the continuous torque rating before thermostat opens.

Mechanical Notes:
1. Axial Load: 100 LBS. Max.
2. Radial Load: 250 LBS. Max. @ 1" from face
3. Motor Sealed to IP65

Motor Data (Sine)

Motor Parameters		Units	1901CSJ****	1901DSJ****	1902CSJ****
Horsepower	Hp Rated	Hp	6.2	3.4	11.9
Kilowatts	KW Rated	KW	4.6	2.6	8.9
Max. Operating Speed	N Max	RPM	2500	1300	2500
Speed @ Rated Torque	N Rated	RPM	1900	900	2000
***Continuous Rated Torque @ Rated Speed**		IN-LBS[Nm]	205 [23.2]	240 [27.1]	375 [42.4]
***Continuous Stall Torque**		IN-LBS[Nm]	280 [31.6]	280 [31.6]	600 [67.8]
Continuous Line Current		AMPS	10.7	5.5	23.58
Peak Torque	Tpk	IN-LBS[Nm]	830 [93.8]	780 [88.1]	1800 [203.4]
Peak Current		AMPS	31.7	15.4	70.4
Max. Theoretical Accel.		RAD/SEC^2	20,244	19,024	23,077
Torque Sensitivity	Kt	IN-LBS/AMP[Nm/AMP]	26.21 [2.96]	50.52 [5.71]	25.58 [2.89]
Back EMF (Line to Line)	±10%	Vrms/Krpm	165	318	161
D.C.Resistance (P-P)	±10%	OHMS	1.4	4.6	.44
Inductance (P-P)	±10%	MILLIHENRIES	15.5	60.2	6.8
Rotor Inertia	Jm	IN-LBS-SEC^2[Kg-M^2]	.0411[.00464]	.0411[.00464]	.0714[.00807]
Static Friction	Tf	IN-LBS[Nm]	8.2[.92]	8.2[.92]	9.8[1.1]
Motor Weight		LBS[Kg]	67[30.4]	67[30.4]	98[44.5]
Line Voltage		VAC	460	460	460

Motor Parameters		Units	1902DSJ****	1904CSJ****	1904DSJ****
Horsepower	Hp Rated	Hp	6.4	18.1	11.2
Kilowatts	KW Rated	KW	4.8	13.5	8.4
Max. Operating Speed	N Max	RPM	1230	2500	1250
Speed @ Rated Torque	N Rated	RPM	800	2150	1050
***Continuous Rated Torque @ Rated Speed**		IN-LBS[Nm]	505 [57.1]	530 [59.9]	675 [76.3]
***Continuous Stall Torque**		IN-LBS[Nm]	600 [67.8]	820 [92.7]	820 [92.7]
Continuous Line Current		AMPS	11.5	32.1	16
Peak Torque	Tpk	IN-LBS[Nm]	1440 [162.7]	3000 [339]	3000 [339]
Peak Current		AMPS	27.5	117	59
Max. Theoretical Accel.		RAD/SEC^2	18,462	22,556	22,556
Torque Sensitivity	Kt	IN-LBS/AMP[Nm/AMP]	52.3 [5.91]	25.58 [2.89]	51.16 [5.78]
Back EMF (Line to Line)	±10%	Vrms/Krpm	329	161	322
D.C.Resistance (P-P)	±10%	OHMS	2.0	19	.72
Inductance (P-P)	±10%	MILLIHENRIES	29.3	3.2	13.4
Rotor Inertia	Jm	IN-LBS-SEC^2[Kg-M^2]	.0714[.00807]	.133[.0150]	.133[.0150]
Static Friction	Tf	IN-LBS[Nm]	9.8[1.1]	13.0[1.5]	13.0[1.5]
Motor Weight		LBS[Kg]	98[44.5]	160[72.6]	160[72.6]
Line Voltage		VAC	460	460	460

Brake Info:

Min. Holding Torque: 90 FT-LBS
Input Voltage: 24VDC
Current: 1.4 AMPS
Inertia: .0085 IN-LB-SEC^2
Weight Adder: 18 LBS

*25° C Ambient with a maximum case temperature of 100° C on motor. Motor mounted on a 14" x 14" x 3/4" aluminum heatsink. Thermostat in stator windings will open if winding temperature exceeds 155° C. This allows for an approximate +10% headroom in the continuous torque rating before thermostat opens.

Mechanical Notes:
1. Axial Load: 100 LBS. Max.
2. Radial Load: 250 LBS. Max. @ 1" from face
3. Motor Sealed to IP65

Custom Designed Servo Motors For Your Specific Application. Call 1-800-358-9070 Today.

Motor Data (Trap)

Motor Parameters		Units	1901CTJ****	1901DTJ****	1902CTJ****
Horsepower	Hp Rated	Hp	6.2	3.4	11.9
Kilowatts	KW Rated	KW	4.6	2.6	8.9
Max. Operating Speed	N Max	RPM	2500	1300	2500
Speed @ Rated Torque	N Rated	RPM	1900	900	2000
***Continuous Rated Torque @ Rated Speed**		IN-LBS[Nm]	205 [23.2]	240 [27.1]	375 [42.4]
***Continuous Stall Torque**		IN-LBS[Nm]	280 [31.6]	280 [31.6]	600 [67.8]
Continuous Line Current		AMPS	15.1	7.8	33.17
Peak Torque	Tpk	IN-LBS[Nm]	830 [93.8]	780 [88.1]	1800 [203.4]
Peak Current		AMPS	44.8	21.8	99.5
Max. Theoretical Accel.		RAD/SEC^2	20,244	19,024	23,077
Torque Sensitivity	Kt	IN-LBS/AMP[Nm/AMP]	18.53 [2.05]	35.73 [4.04]	18.09 [2.04]
Back EMF (Line to Line)	±10%	Vrms/Krpm	165	318	161
D.C.Resistance (P-P)	±10%	OHMS	1.4	4.6	.44
Inductance (P-P)	±10%	MILLIHENRIES	15.5	60.2	6.8
Rotor Inertia	Jm	IN-LBS-SEC^2[Kg-M^2]	.0411[.00464]	.0411[.00464]	.0714[.00807]
Static Friction	Tf	IN-LBS[Nm]	8.2[.92]	8.2[.92]	9.8[1.1]
Motor Weight		LBS[Kg]	67[30.4]	67[30.4]	98[44.5]
Line Voltage		VAC	460	460	460

Motor Parameters		Units	1902DTJ****	1904CTJ****	1904DTJ****
Horsepower	Hp Rated	Hp	6.4	18.1	11.2
Kilowatts	KW Rated	KW	4.8	13.5	8.4
Max. Operating Speed	N Max	RPM	1230	2500	1250
Speed @ Rated Torque	N Rated	RPM	800	2150	1050
***Continuous Rated Torque @ Rated Speed**		IN-LBS[Nm]	505 [57.1]	530 [59.9]	675 [76.3]
***Continuous Stall Torque**		IN-LBS[Nm]	600 [67.8]	820 [92.7]	820 [92.7]
Continuous Line Current		AMPS	16.2	45.4	22.7
Peak Torque	Tpk	IN-LBS[Nm]	1440 [162.7]	3000 [339]	3000 [339]
Peak Current		AMPS	38.9	166	83.0
Max. Theoretical Accel.		RAD/SEC^2	18,462	22,556	22,556
Torque Sensitivity	Kt	IN-LBS/AMP[Nm/AMP]	37 [4.18]	18.09 [2.04]	36.18 [4.09]
Back EMF (Line to Line)	±10%	Vrms/Krpm	329	161	322
D.C.Resistance (P-P)	±10%	OHMS	2.0	19	.72
Inductance (P-P)	±10%	MILLIHENRIES	29.3	3.2	13.4
Rotor Inertia	Jm	IN-LBS-SEC^2[Kg-M^2]	.0714[.0807]	.133[.0150]	.133[.0150]
Static Friction	Tf	IN-LBS[Nm]	9.8[1.1]	13.0[1.5]	13.0[1.5]
Motor Weight		LBS[Kg]	98[44.5]	160[72.6]	160[72.6]
Line Voltage		VAC	460	460	460

Brake Info:

Min. Holding Torque: 90 FT-LBS
Input Voltage: 24VDC
Current : 1.4 AMPS
Inertia: .0085 IN-LB-SEC^2
Weight Adder: 18 LBS

*25° C Ambient with a maximum case temperature of 100° C on motor. Motor mounted on a 14" x 14" x 3/4" aluminum heatsink. Thermostat in stator windings will open if winding temperature exceeds 155° C. This allows for an approximate +10% headroom in the continuous torque rating before thermostat opens.

Mechanical Notes:

1. Axial Load: 100 LBS. Max.
2. Radial Load: 250 LBS. Max. @ 1" from face
3. Motor Sealed to IP65

12” Custom Motors

Example

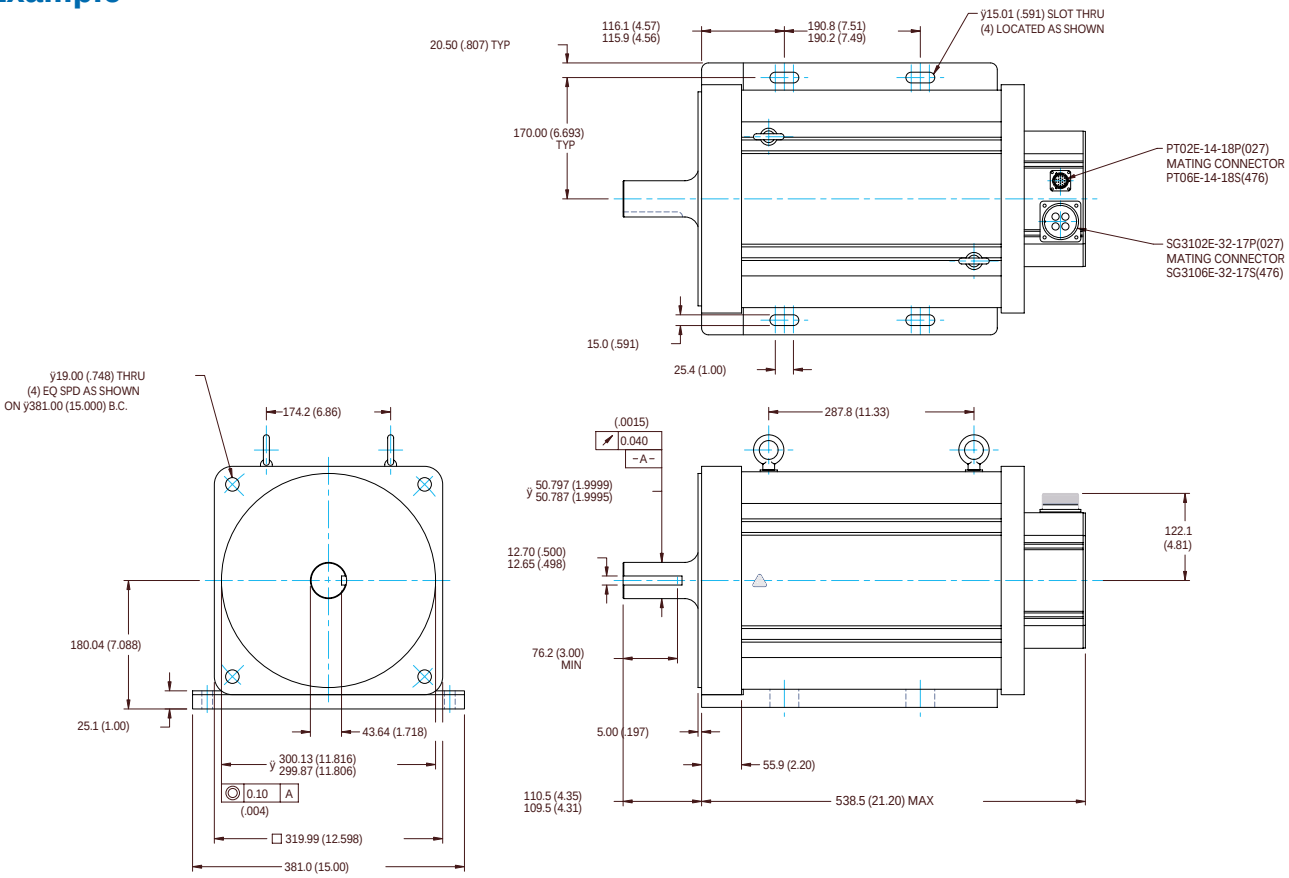

MOTOR DATA @ 460 VAC (TRAP)			
MOTOR PARAMETERS		UNITS	VALUE
HORSEPOWER	HP RATED	Hp	28.7
KILOWATTS	KW RATED	KW	21.4
MAX. OPERATING SPEED	N MAX	RPM	1523
SPEED @ RATED TORQUE	N RATED	RPM	1200
* CONTINUOUS RATED TORQUE @ 1200 RPM		IN-LBS[Nm]	1508.0[169.8]
* CONTINUOUS STALL TORQUE		IN-LBS[Nm]	1676.0[188.7]
CONTINUOUS LINE CURRENT		AMPS	49.3
PEAK TORQUE	Tpk	IN-LBS[Nm]	4190.0[471.8]
PEAK CURRENT		AMPS	123.2
MAX. THEORETICAL ACCEL.		RAD/SEC 2	5,053
TORQUE SENSITIVITY	Kt	IN-LBS/AMP[Nm/AMP]	34.0[3.83]
BACK EMF (LINE TO LINE)	±10%	Vrms/Krpm	302.4
D.C. RESISTANCE (P-P)	±10%	OHMS	.56
INDUCTANCE (P-P)	±10%	MILLIHENRIES	7.4
ROTOR INERTIA	Jm	IN-LBS-SEC [Kg-M2] 2	0.8292[0.0937]
STATIC FRICTION	Tf	IN-LBS[Nm]	16.0[1.8]

*25∞C AMBIENT WITH A MAXIMUM CASE TEMPERATURE OF 100∞C ON MOTOR. THERMOSTAT IN STATOR WINDINGS WILL OPEN IF WINDING EXCEEDS 155∞C. THIS ALLOWS FOR AN APPROXIMATE +10% HEADROOM IN THE CONTINUOUS TORQUE RATING BEFORE THERMOSTAT OPENS.

MECHANICAL NOTES:
1. AXIAL LOAD: 400 LBS MAX
2. RADIAL LOAD: 1000 LBS MAX @ 1" FROM FACE
3. MOTOR SEALED TO IP65.
4. MOTOR WEIGHT: - LBS. [- Kg]
5. MOTOR FINISH: BLACK EPOXY

TITLE: "C"/VER 2/RES/FT MT/OPT 1	DRAWING NUMBER: MPM3202R2F-C1 (2 OF 2)

REVISIONS

REV.	DESCRIPTION	DATE	APPD.
	PRELIMINARY	6/16/00	MVS

CONNECTION CHART
MOTOR CONNECTOR:
SG3102E-32-17P(027)
(270-00066)

MOTOR WIRE LEADS		
PIN	WIRE FUNCTION	WIRE COLOR
A	ΦR	RED
B	ΦS	BLACK
C	ΦT	BLUE
D	PE GND	GRN/YEL

RESOLVER/THERM CONNECTOR:
PT02E-14-18P(027)
(270-00024)

RES/THERM WIRE LEADS		
PIN	WIRE FUNCTION	WIRE COLOR
U	THERM	BLACK
N	THERM	BLACK
H	SIN	YELLOW
G	COS GND	BLACK
S	COS	RED
F	SIN GND	BLUE
R	REF GND	YEL/WHT
E	REF	RED/WHT
D	RES SHLD	GRN/YEL
P	GND	GRN/YEL
A	-	-
B	-	-
C	-	-
J	-	-
K	-	-
L	-	-
M	-	-
T	-	-

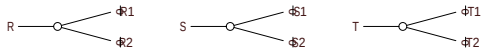

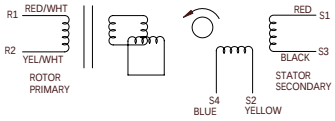

SCHEMATIC DRAWING FOR BRUSHLESS RESOLVER

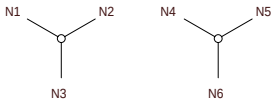

3 PHASE - 12 POLE

NO.	PART NUMBER	DESCRIPTION	QTY.

TOLERANCES UNLESS SPECIFIED
DECIMAL .XX ± .005
DECIMAL .XX ± .010
DECIMAL .X ± .020
FRACTION ± 1/64
ANGLE ± 1/2∞ ±

Parker Hannifin
Automation Division

PROPRIETARY RIGHTS OF MPC AUTOMATION ARE INCLUDED IN THIS INFORMATION DISCLOSED HEREIN. THIS DRAWING AND/OR DOCUMENT SHALL NOT BE REPRODUCED OR TRANSFERRED TO OTHER DOCUMENTS OR USED OR DISCLOSED TO OTHERS FOR ANY PURPOSE EXCEPT FOR WHICH WAS SPECIFICALLY FURNISHED.

DRAWN: MVS	TITLE: "C"/VER 2/RES/FT MT/OPT 1	REV:
DATE: 6/16/00		
CHECKED:	MATERIAL:	
APPROVED:	DRAWING NUMBER: MPM3202R2-C1 (2 OF 2)	SCALE: 1/4:1

Custom Designed Servo Motors For Your Specific Application. Call 1-800-358-9070 Today.

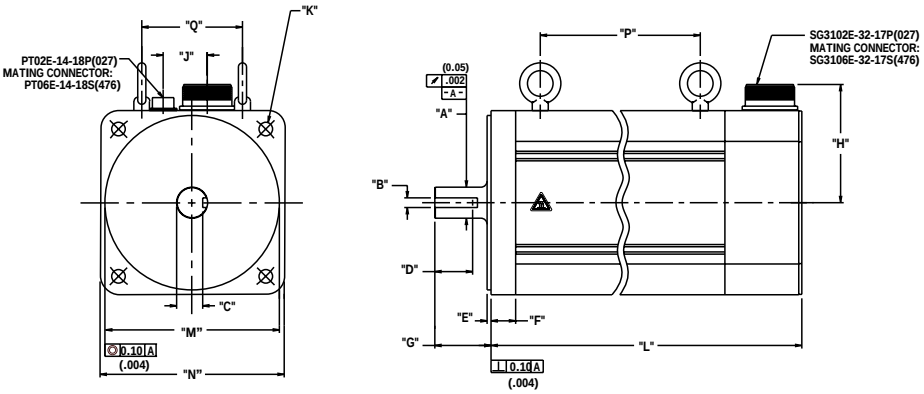

8" (190) Metric Connectorized Termination-Option 1 Motors

Model	"A"	"B"	"C"	"D"	"E"	"F"	"G"	"H"
MPM1901*7*****	ø 32.017(1.2605) 31.999(1.2598)	10.000(.3937) 9.964(.3923)	26.90(1.059)	39.0(1.54) Min	4.0(0.16)	25.4(1.00)	58.5(2.30) 57.5(2.26)	123.0(4.84)
MPM1902*7*****	ø 32.017(1.2605) 31.999(1.2598)	10.000(.3937) 9.964(.3923)	26.90(1.059)	39.0(1.54) Min	4.0(0.16)	25.4(1.00)	58.5(2.30) 57.5(2.26)	123.0(4.84)
MPM1904*7*****	ø 48.019(1.8905) 47.998(1.8897)	14.000(.5512) 13.957(.5495)	42.39(1.669)	39.0(1.54) Min	4.0(0.16)	25.4(1.00)	58.5(2.30) 57.5(2.26)	123.0(4.84)

Model	J"	"K"	"L"	"L"w/ Brake	"M"	"N"	"P"	"Q"
MPM1901*7*****	45.5(1.79)	Ø14.00(.551)THRU(4)EQ SPD AS SHOWN ON Ø215.00(8.464)B.C.	321.2(12.65)Max	397.5(15.65)Max	ø 180.01(7.087) 179.99(7.086)	☐ 190.0(7.48)	165.1(6.50)	103.9(4.09)
MPM1902*7*****	45.5(1.79)	Ø14.00(.551)THRU(4)EQ SPD AS SHOWN ON Ø215.00(8.464)B.C.	397.5(15.65)Max	473.7(18.65)Max	ø 180.01(7.087) 179.99(7.086)	☐ 190.0(7.48)	241.3(9.50)	103.9(4.09)
MPM1904*7*****	45.5(1.79)	Ø14.00(.551)THRU(4)EQ SPD AS SHOWN ON Ø215.00(8.464)B.C.	549.9(21.65)Max	626.1(24.65)Max	ø 180.01(7.087) 179.99(7.086)	☐ 190.0(7.48)	393.7(15.50)	103.9(4.09)

Metric = 7 Units: mm (in) For Mechanical Dimensions on Termination Option 2 Consult Factory.
Option 6-Not Available
Custom Mounts-Consult Factory

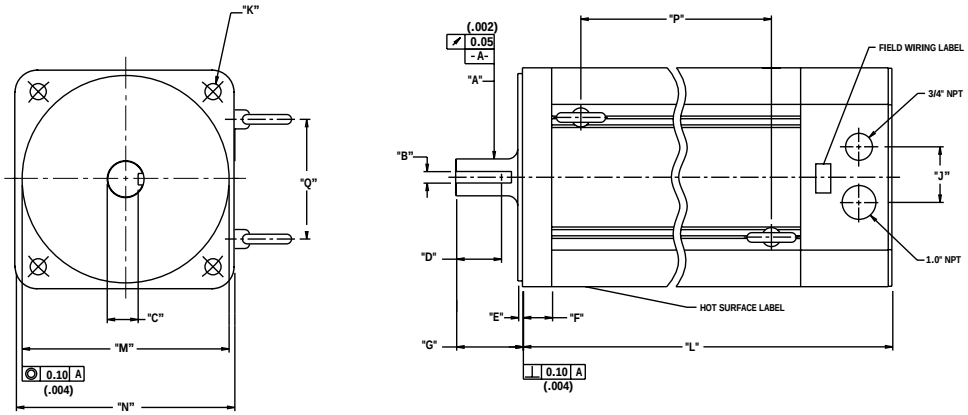

8" (190) Metric NPT Termination-Option 3 Motors

Model	"A"	"B"	"C"	"D"	"E"	"F"	"G"
MPM1901*7*****	ø 32.017(1.2605) 31.999(1.2598)	10.000(.3937) 9.964(.3923)	26.90(1.059)	39.0(1.54)Min	4.0(0.16)	25.4(1.00)	58.5(2.30) 57.5(2.26)
MPM1902*7*****	ø 32.018(1.2605) 31.998(1.2598)	10.000(.3937) 9.964(.3923)	26.90(1.059)	39.0(1.54)Min	4.0(0.16)	25.4(1.00)	58.5(2.30) 57.5(2.26)
MPM1904*7*****	ø 48.019(1.8905) 47.998(1.8897)	14.000(.5512) 13.957(.5495)	42.39(1.669)	39.0(1.54)Min	4.0(0.16)	25.4(1.00)	58.5(2.30) 57.5(2.26)

Model	"J"	"K"	"L"	"L"w/ Brake	"M"	"N"	"P"	"Q"
MPM1901*7*****	48.3(1.90)	Ø14.00(.551)THRU (4)EQ SPD AS SHOWN ON Ø215.00(8.464) B.C.	321.2(12.65)Max	397.5(15.65)Max	ø 180.01(7.087) 179.99(7.086)	□ 190.0(7.48)	165.1(6.50)	103.9(4.09)
MPM1902*7*****	48.3(1.90)	Ø14.00(.551)THRU (4)EQ SPD AS SHOWN ON Ø215.00(8.464) B.C.	397.5(15.65)Max	473.7(18.65)Max	ø 180.01(7.087) 179.99(7.086)	□ 190.0(7.48)	241.3(9.50)	103.9(4.09)
MPM1904*7*****	48.3(1.90)	Ø14.00(.551)THRU (4)EQ SPD AS SHOWN ON Ø215.00(8.464) B.C.	549.9(21.65)Max	626.1(24.65)Max	ø 180.01(7.087) 179.99(7.086)	□ 190.0(7.48)	393.7(15.50)	103.9(4.09)

Metric = 7 Units: mm (in)
Option 6-Not Available
Custom Mounts-Consult Factory

For Mechanical Dimensions on Termination Option 2 Consult Factory.

Custom Designed Servo Motors For Your Specific Application. Call 1-800-358-9070 Today.

8" Motor with Resolver Feedback

Option 1

Motor Connector 270-00066 (SG3102E-32-17P(027))

Pin	Function
A	ϕR
B	ϕS
C	ϕT
D	PE GND

Resolver Connector 270-00024(PT02E-14-18P(027))

Pin	Function
U	THERM
N	THERM
H	SIN
G	COS GND
S	COS
F	SIN GND
R	REF GND
E	REF
D	RES SHLD
P	GND
*A	BRK (+)
*B	BRK (-)
*C	BRK SHLD
J	-
K	-
L	-
M	-
T	-

*USE ONLY WITH BRAKE OPTION

Option 2

Motor Connector 270-00352 (FECF08CMRAB000)

Pin	Function
U	ϕR(U1)
V	ϕS(V1)
W	ϕT(W1)
PE	PE GND
*+	BRK (+)
*-	BRK (–)
1	THERM
2	THERM

*USE ONLY WITH BRAKE OPTION

Resolver Connector 270-00257 (AEGA052NN00000013000)

Pin	Function
1	-
2	REF (R1)
3	REF GND (R2)
4	COS GND (S1)
5	COS (S3)
6	SIN (S2)
7	SIN GND (S4)
8	-
9	-
10	-
11	-
12	-

Option 3

Connection Chart (NPT) Resolver

Terminal	Function	
1	ϕR	MOTOR CONN
2	ϕS	MOTOR CONN
3	ϕT	MOTOR CONN
-	PE GND -	
*S11	BRK (+)	TB2 (BRAKE CONN)
*S10	BRK (-)	TB2 (BRAKE CONN)
S9	REF GND	TB1 (RESOLVER & THERM CONN)
S8	REF	TB1 (RESOLVER & THERM CONN)
S7	SIN	TB1 (RESOLVER & THERM CONN)
S6	COS	TB1 (RESOLVER & THERM CONN)
S5	COS GND	TB1 (RESOLVER & THERM CONN)
S4	SIN GND	TB1 (RESOLVER & THERM CONN)
S3	THERM	TB1 (RESOLVER & THERM CONN)
S2	THERM	TB1 (RESOLVER & THERM CONN)
S1	RES SHLD	TB1 (RESOLVER & THERM CONN)

*USE ONLY WITH BRAKE OPTION

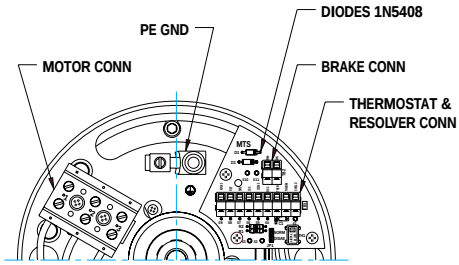

8" Motor with Encoder Feedback

Option 1

Motor Connector 270-00066 (SG3102E-32-17P(027))

Pin	Function
A	ϕR
B	ϕS
C	ϕT
D	PE GND

Encoder Connector 270-00024(PT02E-14-18P(027))

Pin	Function
T	GROUND
K	+5VDC
B	CH A
C	CH A\
N	CH B
P	CH B\
M	CH Z
U	CH Z\
E	CH U
R	CH U\
F	CH V
S	CH V\
G	CH W
H	CH W\
D	GND/CABLE
A	THERM
L	THERM
J	GND

Option 1 with brake

Encoder Brake Connector 270-00219 (PT02E-16-23P(027))

Pin	Function
T	GROUND
K	+5VDC
B	CH A
C	CH A\
N	CH B
P	CH B\
M	CH Z
U	CH Z\
E	CH U
R	CH U\
F	CH V
S	CH V\
G	CH W
H	CH W\
D	GND/CABLE
A	THERM
L	THERM
J	GND
V*	BRK (+)
W*	BRK (–)
X*	BRK SHLD
Y	-
Z	-

*USE ONLY WITH BRAKE OPTION

Option 2

Motor Connector 270-00352 (FECF08CMRAB000)

Pin	Function
U	ϕR(U1)
PE	PE GND
W	ϕS(W1)
V	ϕT(V1)
*+	BRK (+)
*–	BRK (–)
1	THERM
2	THERM

* USE ONLY WITH BRAKE OPTION

Motor Connector 270-00257 (AEGA052NN00000013000)

Pin	Function
1	GND(OV)
2	CH A\(A)
3	CH A(A\)
4	CH B(B)
5	CH B\(B\)
6	CH Z(Z)
7	CH Z\(Z\)
8	+5V(+5V)
9	-
10	CH U(RLG U)
11	CH V(RLG V)
12	CH W(RLG W)

Option 3-Consult Factory

Custom Designed Servo Motors For Your Specific Application. Call 1-800-358-9070 Today.

MaxPlus® Linear Servo Motors

The MaxPlus linear servo motors are revolutionizing the industry with its superior linear motion technology.

Available in both dual row and single row magnet configurations, MaxPlus linear motors are designed to exceed the rigorous demands required in advanced manufacturing, assembly, test and inspection environments. Our MaxPlus line of linear servo motors utilizes an ironless core design that provides high peak-to-continuous force ratios and extremely high acceleration in high-speed applications. MaxPlus linear motors have superior thermal properties and the highest force to coil weight available. All of which means you can expect exceptional performance, smooth motion, high accuracy, plus unparalleled acceleration and stiffness.

Compumotor is continually working with new and emerging technologies to improve our product offering. For example, MaxPlus linear servo motors utilize a patented, automated machine winding technology that results in excellent unit-tounit consistency at a significantly lower cost.

MaxPlus Linear Motor Features

- Continuous force up to 325 lbs./1446N
- Peak force up to 1620 lbs./7206N
- High force to coil mass ratio
- High accuracy/repeatability
- Efficient thermal performance
- Velocities > 10M/sec. Accelerations > 10G
- Zero magnetic preload
- Sinusoidal or hall effect commutation
- Thermistor
- Thermostat optional
- High-performance rare earth magnets
- Low inductance coil for fast response
- Non-contacting assemblies
- Continuous track to 72 in./1.8m*
- Configurable connections/cable options
- Fully customizable design

* 2000 Series available to 72 in./1.8m

BEMF Constant

The BEMF constant is multiplied by the maximum motor speed to determine how much voltage is generated by the motor. The amplifier must be able to produce more voltage than the generated voltage to cause current to flow in the motor. The following formula is a good rule of thumb to determine the needed amplifier voltage:

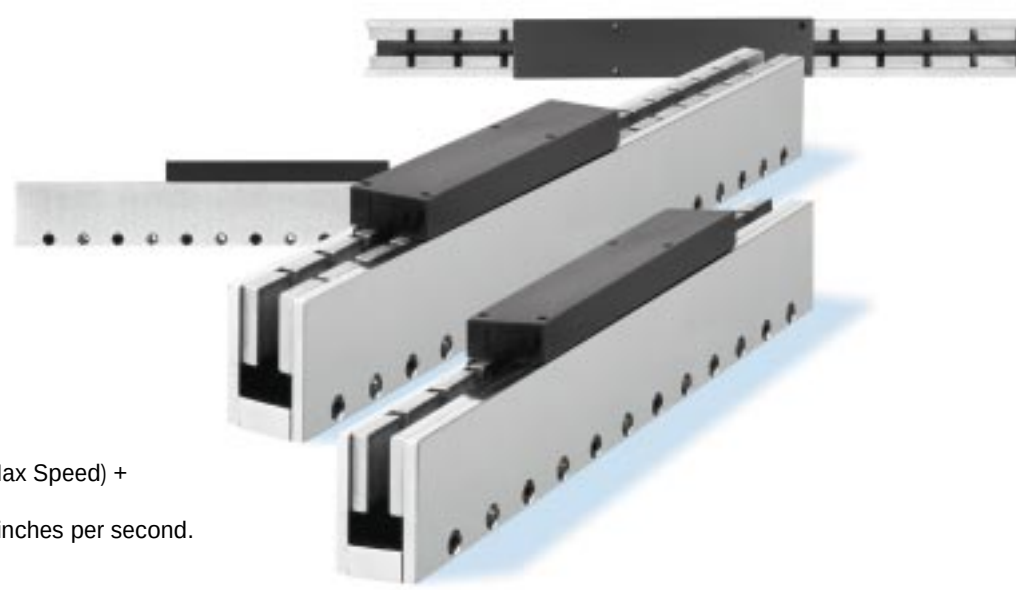

Bus Voltage = 1.25 * ((BEMF * Max Speed) + (DC Resistance (hot) * Current))
Remember to express speed in inches per second.

Continuous Force

Continuous force is the largest force that the motor can exert on the system for an extended period of time. To use the motor at this power level, a suitable heat sink must be provided for all the power dissipated by the motor (see Heat Management).

Force Constant

The force constant is the force produced by applying 1 amp DC to the motor and is specified in LBS/AMP (N/AMP).

Peak Force

Peak force is the largest force that the motor can exert on the system for a short period of time. It is specified for a 10% or shorter duty cycle. To use the motor at peak force, a suitable heat sink must be provided for all the power dissipated by the motor (see Heat Management).

Electrical Time Constant

The electrical time constant is the motor inductance divided by the motor resistance. It is a measure of how quickly the motor current can be changed. The stated value is the time it takes for the current to arrive at the 63% point of the applied current. The MaxPlus Linear Motor is ironless and has a low inductance. This allows the motor response to be very quick.

HED (Hall Effect Device)

All servo amplifiers will require some type of commutation device. A Hall Device is available for commutation of trapezoidal type drives and for initial positioning for Sine type drives. The HED is positioned deep within the magnet track to prevent picking up external disturbances. It is built in to the coil as an option to minimize added length.

Heat Management

All motor coils contain resistance. As current is driven through this resistance, heat is produced. The power lost (heat) is equal to the current squared times the resistance ($P=I^2R$). The MaxPlus linear motor has been optimized such that resistance is minimized and the thermal path to remove heat from the motor is as efficient as possible. Heat management is the principal design criteria when applying this style of motor. Failure to observe and control heat can result in motor failure.

MaxPlus motors come with a thermistor to measure the motor temperature, and provides complete thermal protection, ensuring a long life for both the motor and the system. A thermostat type switch is available as an option to shut the system down if the motor temperature rating is exceeded.

Custom Designed Servo Motors For Your Specific Application. Call 1-800-358-9070 Today.

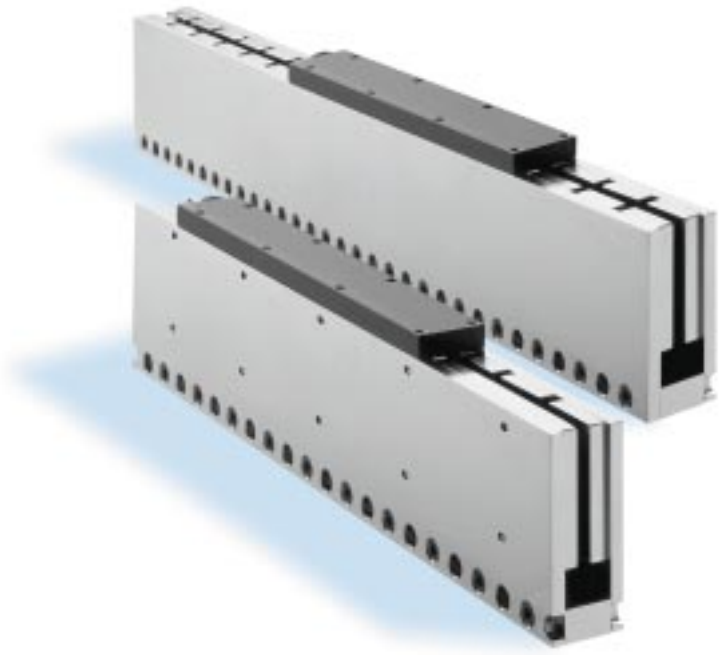

Coil Length

The coil length is actually the length of the coil, excluding the mounting bracket. It does not include the bend radius of cable attached to the end of the motor bracket. The length of travel is normally described as the magnet track length minus the coil length. Remember to account for the length of the HED module when required.

Coil Weight

The specified weight of the coil assembly includes approximately one foot of cable. This weight should be added to the stage and load weights to calculate the total moving mass.

Inductance

The inductance of the winding and the resistance of the winding determine the electrical time constant of the motor. Lower inductance is desired for faster motor response but the amplifier may require a minimum inductance to drive the motor successfully. The option of coil connections in parallel reduces inductance, back EMF and resistance, but requires double the current to produce the same force.

Heat Management, continued

When applications of the MaxPlus linear motor approach performance extremes, heat dissipation will be the principal limiting factor. Heat is removed from the motor by conduction into the attached mass (motor load), convection and radiation into the surrounding environment. Of these, conduction is the primary contributor. The motor load (stage, work-piece, table, etc.) must behave as a heat sink to conduct heat away from the motor. Heat must be conducted away fast enough to maintain a temperature below the maximum rating during motor “STALL” conditions. The motor temperature MUST NEVER be allowed to go higher than the maximum 125°C rating.

The power (P) into the motor during static conditions is determined by the equation $P=I^2 R$ where I is the current being supplied to the motor and R is the resistance of the motor coils.

A current of 4 Amps through the resistance of 8 ohms will cause the motor to draw 128 watts. A rated motor resistance of 8 ohms at room temperature will become 11.3 ohms at 125°C. At this resistance the power draw becomes 180 watts. Heat must be withdrawn fast enough such that the motor does not exceed its maximum rated temperature.

The user must be aware of the system thermal dynamics, the heat removal process and the responsibility to design with one of the thermal protection devices active. Contact the factory for more information about the use of these devices in your system, or additional cooling options to extend the operating range of the motor.

Resistance

Understanding the motor resistance is important to proper motor application. Motor resistance increases with temperature by 0.393% per degree C. Motor power is defined by the equation: $P=I^2 * R$

Where: I=Current
P=Power
R=Resistance

As the motor warms up (keeping the current a constant) the power dissipated by the motor increases. This increase causes the motor to warm up even faster. The temperature reached by the winding is above the ambient temperature as a result of the power being dissipated by the motor.

Coil Ordering Chart

LMC	12	4	1	S	072	X
LINEAR MOTOR COIL	FRAME SIZE	COIL STATOR LENGTH	COIL TYPE	CONFIG	CABLE LENGTH	THERMAL DEVICE
					STANDARD	
	12=1200SERIES	1	1=COIL ONLY	S=SERIES	072=72"	L=NORMALLY CLOSED
	15=1500SERIES	2	3=COIL/120HED	P=PARALLEL	180=180"	F=NORMALLY OPEN
	20=2000SERIES	3				
	28=2800SERIES	4			*SPECIAL LENGTH CONSULT FACTORY	X=NEGATIVE TEMP. COEF. THERMISTOR
		5* ONLY WITH 2000and 2800SERIES				
		6, 7, and 8** ONLY WITH 2800SERIES				

The jacket strip length is 2.0" Standard. The lead strip length is .25" Standard.

If product cannot fall under this system, it will be processed as special. The special part number system will follow as the above example except after coil there will be a "-" and a 5 digit number, i.e., LMC1241-20000 (Thru 49999)

Magnet Track Ordering Chart

LM	D	T	12	25.2	F	S	S
LINEAR MOTOR	OPTION	TRACK	SIZE	TRACK LENGTH	MAGNET	PROFILE	STANDARD
	D=DOUBLE ROW		12=1200 SERIES	25.2=25.2"	F=1200,1500 and 2800 (STANDARD)	S=STANDARD	S=STANDARD
	S=SINGLE ROW		15=1500 SERIES	*1200and 1500 SERIES SOLD IN 1.2" INCREMENTS	B=2000 (STANDARD)		
			20=2000 SERIES	*2000and 2800 SERIES SOLD IN 2.4" INCREMENTS			
			28=2800 SERIES				

If product cannot fall under this system, it will be processed as special. The special part number system will follow as the above example except after track length there will be a "–" and a 5 digit number, i.e., LMD1225.2-50000 (thru 99999)

Note: For Metric Mounting, Consult Factory.

Custom Designed Servo Motors For Your Specific Application. Call 1-800-358-9070 Today.

1200 Series Brushless Linear Servo Motor

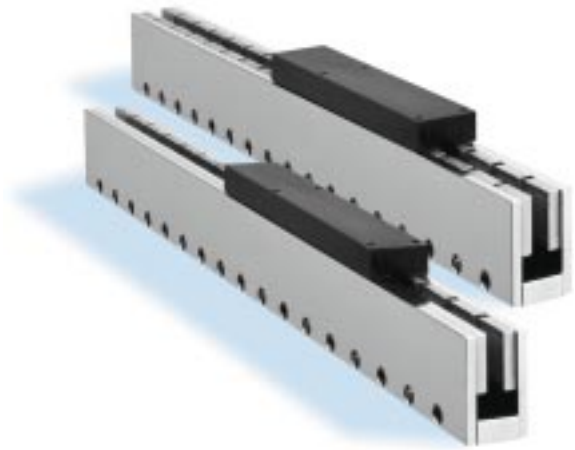

1200 LMST Motor Data

	Units	1200-1	1200-2	1200-3	1200-4
Coil Length	IN[mm]	2.4[60.96]	4.8[121.92]	7.2[182.88]	9.6[243.84]
Bracket Length****	IN[mm]	3.6[91.44]	6.0[152.40]	8.4[213.36]	10.8[274.32]
Coil Weight	LBS[Kg]	0.22[0.099]	0.44[0.199]	0.66[0.299]	0.88[0.399]
Magnet Track Weight***	LBS/FT[gr/mm]	2.0[2.98]	2.0[2.98]	2.0[2.98]	2.0[2.98]
Max. Operating Temp	°C	125	125	125	125

Series Connected Coils	Units	1200-1	1200-2	1200-3	1200-4
Force Constant	LBS[N]/AMP	1.12[4.98]	2.24[9.96]	3.36[14.95]	4.48[19.93]
Continuous Force	LBS[N]	3.36[14.95]	6.72[29.89]	10.08[44.84]	13.44[59.78]
Continuous Current**	AMPS	3.0	3.0	3.0	3.0
Continuous Power at 125°C	WATTS	98.19	193.83	290.74	387.66
Peak Force	LBS[N]	10.62[47.24]	21.25[94.52]	31.88[141.81]	42.50[189.05]
Peak Current	AMPS	9.49	9.49	9.49	9.49
Peak Power at 125°C	WATTS	982.0	1938.0	2907.0	38770
Coil Resistance* at 25°C at Coil	OHMS	10.86	21.72	32.58	43.44
Phase Resistance* at 25°C in Delta	OHMS	7.24	14.48	21.72	28.96
Coil Resistance* at max operating temp at Coil	OHMS	16.37	32.30	48.46	64.61
Phase Resistance* at max operating temp in Delta	OHMS	10.91	21.54	32.30	43.07
Inductance at 1kHZ	mH	1.98	3.96	5.94	7.92
Back EMF Constant	V/IPS[V/MPS]	0.13[5.12]	0.26[10.23]	0.39[15.35]	0.52[20.47]
Electrical Time Constant*	MSEC	0.10	0.10	0.10	0.10

Parallel Connected Coils	Units	1200-1	1200-2	1200-3	1200-4
Force Constant	LBS[N]/AMP	0.56[2.49]	1.12[4.98]	2.24[9.96]	3.36[14.95]
Continuous Force	LBS[N]	3.36[14.95]	6.72[29.89]	10.08[44.84]	13.44[59.78]
Continuous Current**	AMPS	6.0	6.0	6.0	6.0
Continuous Power at 125°C	WATTS	98.19	193.83	290.74	387.66
Peak Force	LBS[N]	10.62[47.24]	21.25[94.52]	31.88[141.81]	42.50[189.05]
Peak Current	AMPS	18.97	18.97	18.97	18.97
Peak Power at 125°C	WATTS	982.0	1938.0	2907.0	3877.0
Coil Resistance* at 25°C at Coil	OHMS	2.72	5.43	8.15	10.86
Phase Resistance* at 25°C in Delta	OHMS	1.81	3.62	5.43	7.24
Coil Resistance* at max operating temp at Coil	OHMS	4.09	8.08	12.11	16.15
Phase Resistance* at max operating temp in Delta	OHMS	2.73	5.38	8.08	10.77
Inductance at 1kHZ	mH	0.50	0.99	1.49	1.98
Back EMF Constant	V/IPS[V/MPS]	0.06[2.36]	0.13[5.12]	0.20[7.87]	0.26[10.23]
Electrical Time Constant*	MSEC	0.10	0.10	0.10	0.10

*These specifications reflect a 6-lead or delta connection coil with 1 foot of cable. A 6-lead motor has starts/finishes available at the cable end for control of each individual phase. Additional cable will increase resistance values.
**An appropriate heatsink is required to dissipate the continuous power generated by the motor coil, thus maintaining the coil assembly at or below the maximum specified operating temperature. Consult the Compumotor applications manual for more detail on thermal management.
***Magnet track weight specified for 1200-LMSTmodel. Lightweight magnet tracks are available. Please consult with your local representative or Compumotor for more information.
****Without Hall Effect Device

1200 LMDT Motor Data

	Units	1200-1	1200-2	1200-3	1200-4
Coil Length	IN[mm]	2.4[60.96]	4.8[121.92]	7.2[182.88]	9.6[243.84]
Bracket Length****	IN[mm]	3.6[91.44]	6.0[152.40]	8.4[213.36]	10.8[274.32]
Coil Weight	LBS[Kg]	0.22[0.099]	0.44[0.199]	0.66[0.299]	0.88[0.399]
Magnet Track Weight***	LBS/FT[gr/mm]	2.0[2.98]	2.0[2.98]	2.0[2.98]	2.0[2.98]
Max. Operating Temp	°C	125	125	125	125

Series Connected Coils	Units	1200-1	1200-2	1200-3	1200-4
Force Constant	LBS[N]/AMP	2.0[8.90]	4.0[17.79]	6.0[26.69]	8.0[35.59]
Continuous Force	LBS[N]	6.0[26.69]	12.0[53.38]	18.0[80.07]	24.0[106.76]
Continuous Current**	AMPS	3.0	3.0	3.0	3.0
Continuous Power at 125°C	WATTS	98.19	193.83	290.74	387.66
Peak Force	LBS[N]	18.97[84.38]	37.95[168.81]	56.94[253.26]	75.89[337.58]
Peak Current	AMPS	9.49	9.49	9.49	9.49
Peak Power at 125°C	WATTS	982.0	1938.0	2907.0	38770
Coil Resistance* at 25°C at Motor	OHMS	10.86	21.72	32.58	43.44
Phase Resistance* at 25°C in Delta	OHMS	7.24	14.48	21.72	28.96
Coil Resistance* at max operating temp at Coil	OHMS	16.37	32.30	48.46	64.61
Phase Resistance* at max operating temp in Delta	OHMS	10.91	21.54	32.30	43.07
Inductance at 1kHZ	mH	1.98	3.96	5.94	7.92
Back EMF Constant	V/IPS[V/MPS]	0.23[9.06]	0.47[18.50]	0.70[27.56]	0.93[36.61]
Electrical Time Constant*	MSEC	0.18	0.18	0.18	0.18

Parallel Connected Coils	Units	1200-1	1200-2	1200-3	1200-4
Force Constant	LBS[N]/AMP	1.0[4.45]	2.0[8.90]	3.0[13.34]	4.0[17.79]
Continuous Force	LBS[N]	6.0[26.69]	12.0[53.38]	18.0[80.07]	24.0[106.76]
Continuous Current**	AMPS	6.0	6.0	6.0	6.0
Continuous Power at 125°C	WATTS	98.19	193.83	290.74	387.66
Peak Force	LBS[N]	18.97[84.38]	37.95[168.81]	56.94[253.26]	75.89[337.58]
Peak Current	AMPS	18.97	18.97	18.97	18.97
Peak Power at 125°C	WATTS	982.0	1938.0	2907.0	38770
Coil Resistance* at 25°C at Motor	OHMS	2.72	5.43	8.15	10.86
Phase Resistance* at 25°C in Delta	OHMS	1.81	3.62	5.43	7.24
Coil Resistance* at max operating temp at Coil	OHMS	4.09	8.08	12.11	16.15
Phase Resistance* at max operating temp in Delta	OHMS	2.73	5.38	8.08	10.77
Inductance at 1kHZ	mH	0.50	0.99	1.49	1.98
Back EMF Constant	V/IPS[V/MPS]	0.12[4.53]	0.24[9.25]	0.35[13.78]	0.47[18.31]
Electrical Time Constant*	MSEC	0.18	0.18	0.18	0.18

*These specifications reflect a 6-lead or delta connection coil with 1 foot of cable. A 6-lead motor has starts/finishes available at the cable end for control of each individual phase. Additional cable will increase resistance values.
**An appropriate heatsink is required to dissipate the continuous power generated by the motor coil, thus maintaining the coil assembly at or below the maximum specified operating temperature. Consult the Compumotor applications manual for more detail on thermal management.
***Magnet track weight specified for 1200-LMDTmodel. Lightweight magnet tracks are available. Please consult with your local representative or Compumotor for more information.
****Without Hall Effect Device

Custom Designed Servo Motors For Your Specific Application. Call 1-800-358-9070 Today.

1200 Series Magnet Track

Customer will also have 1/4-28UNF-2B holes in the bottom for mounting.

Consult factory for specific mounting patterns for different magnet track lengths.

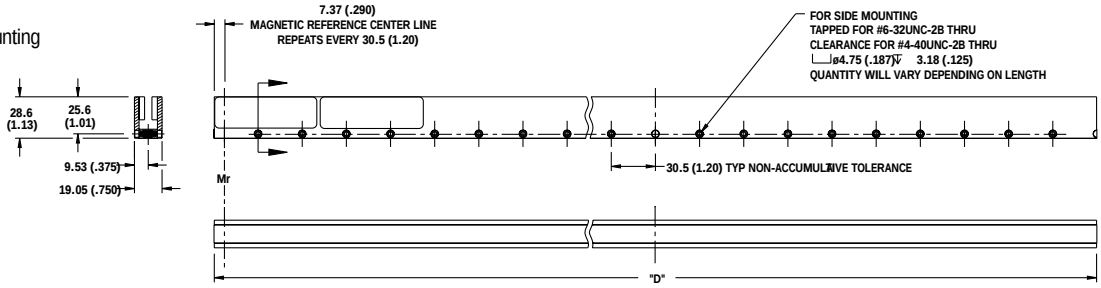

1200 Series Coil

Coil Length	"L" in / mm	"N" # of Holes	"B" in / mm
1	3.6 / 91.4	4	2.41 / 61.2
2	6.0 / 152.4	6	4.81 / 122.2
3	8.4 / 213.4	8	7.21 / 183.1
4	10.8 / 274.3	10	9.61 / 244.1

Travel distance (no vertical obstruction) = Magnet track length ("D") – Coil length ("B")

Travel distance (with vertical obstruction) = Magnet track length ("D") – (Coil length ("L") + 2.0" Cable bend radius)

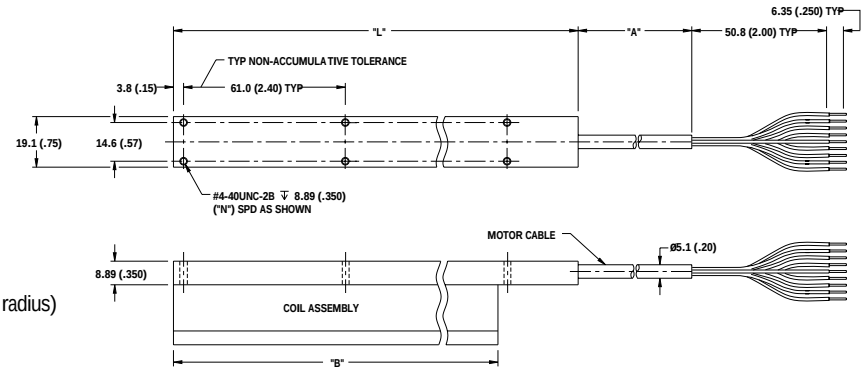

1200 Series Coil/120° HED

Coil Length	"L" in / mm	"N" # of Holes
1	3.9 / 99.1	4
2	6.3 / 160.0	6
3	8.7 / 221.0	8
4	11.1 / 281.9	10

Travel distance (no vertical obstruction) = Magnet track length ("D") – Coil length ("L")

Travel distance (with vertical obstruction) = Magnet track length ("D") – (Coil length ("L") + 2.0" Cable bend radius)

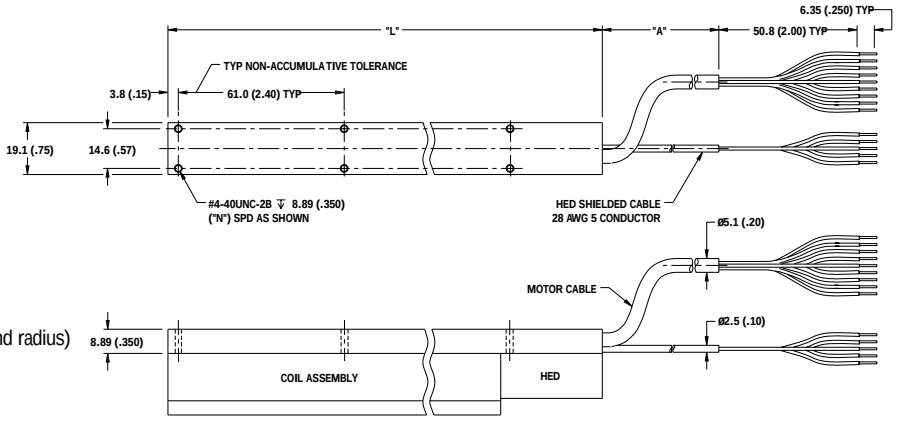

Motor/Hall Wiring

Hall Commutation	
SHLD	SHLD
BLK	GND
RED	+5VDC
GRN	W
BLUE	V
WHT	U

Care should be taken to center coil within the track as evenly as possible in all directions when mounting the magnet track and coil.

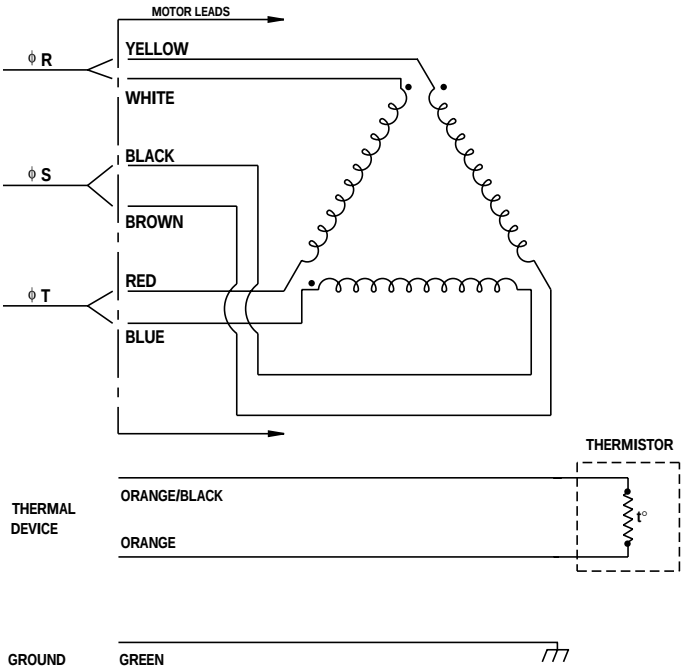

For Detailed Commutation, Consult Factory.

Additional Products

To meet all of your linear motion requirements, these additional products and linear system capabilities are available:

Custom Mounting Holes/Brackets
Clean Room Compatibility
Cable/Connector Options
Air Cooling
Water Cooling

Custom Designed Servo Motors For Your Specific Application. Call 1-800-358-9070 Today.

1500 Series Brushless Linear Servo Motor

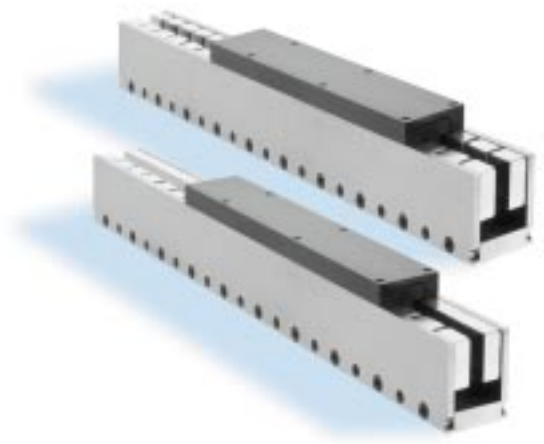

1500 LMST Motor Data

	Units	1500-1	1500-2	1500-3	1500-4
Coil Length	IN[mm]	2.4[60.96]	4.8[121.92]	7.2[182.88]	9.6[243.84]
Bracket Length****	IN[mm]	3.6[91.44]	6.0[152.40]	8.4[213.36]	10.8[274.32]
Coil Weight	LBS[Kg]	0.23[0.104]	0.55[0.249]	0.78[0.353]	1.10[0.498]
Magnet Track Weight***	LBS/FT[gr/mm]	3.7[5.51]	3.7[5.51]	3.7[5.51]	3.7[5.51]
Max. Operating Temp	°C	125	125	125	125

Series Connected Coils	Units	1500-1	1500-2	1500-3	1500-4
Force Constant	LBS[N]/AMP	1.58[7.03]	3.15[14.01]	4.73[21.04]	6.30[28.02]
Continuous Force	LBS[N]	5.04[22.42]	10.14[45.01]	15.17[67.76]	20.16[89.68]
Continuous Current**	AMPS	3.3	3.3	3.3	3.3
Continuous Power at 125°C	WATTS	103.0	206.3	310.0	4130
Peak Force	LBS[N]	16.07[71.48]	32.14[142.97]	48.16[214.23]	63.84[283.97]
Peak Current	AMPS	10.44	10.44	10.44	10.44
Peak Power at 125°C	WATTS	1032.0	2063.0	3095.0	41260
Coil Resistance* at 25°C at Motor	OHMS	10.20	20.40	30.60	40.80
Phase Resistance* at 25°C in Delta	OHMS	6.80	13.60	20.40	27.20
Coil Resistance* at max operating temp at Coil	OHMS	14.21	28.42	42.63	56.83
Phase Resistance* at max operating temp in Delta	OHMS	9.47	18.94	28.42	37.89
Inductance at 1kHZ	mH	2.02	4.04	6.06	8.08
Back EMF Constant	V/IPS[V/MPS]	0.16[6.30]	0.31[12.20]	0.47[18.50]	0.62[24.41]
Electrical Time Constant*	MSEC	0.17	0.17	0.17	0.17

Parallel Connected Coils	Units	1500-1	1500-2	1500-3	1500-4
Force Constant	LBS[N]/AMP	0.79[3.51]	1.57[6.98]	2.35[10.45]	3.08[13.70]
Continuous Force	LBS[N]	5.04[22.42]	10.14[45.10]	15.12[67.26]	20.16[89.68]
Continuous Current**	AMPS	6.6	6.6	6.6	6.6
Continuous Power at 125°C	WATTS	103.0	206.3	310.0	4130
Peak Force	LBS[N]	16.07[71.48]	32.14[142.97]	48.16[214.23]	63.84[283.97]
Peak Current	AMPS	20.87	20.87	20.87	20.87
Peak Power at 125°C	WATTS	1032.0	2063.0	3100.0	41260
Coil Resistance* at 25°C at Motor	OHMS	2.55	5.10	7.65	10.20
Phase Resistance* at 25°C in Delta	OHMS	1.70	3.40	5.10	6.80
Coil Resistance* at max operating temp at Coil	OHMS	3.55	7.10	10.66	14.21
Phase Resistance* at max operating temp in Delta	OHMS	2.37	4.74	7.10	9.47
Inductance at 1kHZ	mH	0.51	1.01	1.52	2.02
Back EMF Constant	V/IPS[V/MPS]	0.08[3.15]	0.16[6.30]	0.23[9.06]	0.31[12.20]
Electrical Time Constant*	MSEC	0.08	0.08	0.08	0.08

*These specifications reflect a 6-lead or delta connection coil with 1 foot of cable. A 6-lead motor has starts/finishes available at the cable end for control of each individual phase. Additional cable will increase resistance values.
**An appropriate heatsink is required to dissipate the continuous power generated by the motor coil, thus maintaining the coil assembly at or below the maximum specified operating temperature. Consult the Compumotor applications manual for more detail on thermal management.
***Magnet track weight specified for 1500-LMSTmodel. Lightweight magnet tracks are available. Please consult with your local representative or Compumotor for more information.
****Without Hall Effect Device

1500 LMDT Motor Data

	Units	1500-1	1500-2	1500-3	1500-4
Coil Length	IN[mm]	2.4[60.96]	4.8[121.92]	7.2[182.88]	9.6[243.84]
Bracket Length****	IN[mm]	3.6[91.44]	6.0[152.40]	8.4[213.36]	10.8[274.32]
Coil Weight	LBS[Kg]	0.23[0.104]	0.55[0.249]	0.78[0.353]	1.1[0.498]
Magnet Track Weight***	LBS/FT[gr/mm]	3.7[5.51]	3.7[5.51]	3.7[5.51]	3.7[5.51]
Max. Operating Temp	°C	125	125	125	125

Series Connected Coils	Units	1500-1	1500-2	1500-3	1500-4
Force Constant	LBS[N]/AMP	2.8[12.46]	5.5[24.47]	8.3[36.92]	11.0[48.93]
Continuous Force	LBS[N]	9.0[40.03]	18.1[80.51]	27.0[120.10]	36.0[160.14]
Continuous Current**	AMPS	3.3	3.3	3.3	3.3
Continuous Power at 125°C	WATTS	103.0	206.3	310.0	4130
Peak Force	LBS[N]	28.7[127.66]	57.4[255.33]	86.0[382.55]	114.0[507.10]
Peak Current	AMPS	10.44	10.44	10.44	10.44
Peak Power at 125°C	WATTS	1032.0	2063.0	3095.0	41260
Coil Resistance* at 25°C at Motor	OHMS	10.20	20.40	30.60	40.80
Phase Resistance* at 25°C in Delta	OHMS	6.80	13.60	20.40	27.20
Coil Resistance* at max operating temp at Coil	OHMS	14.21	28.42	42.63	56.83
Phase Resistance* at max operating temp in Delta	OHMS	9.47	18.94	28.42	37.89
Inductance at 1kHZ	mH	2.02	4.04	6.06	8.08
Back EMF Constant	V/IPS[V/MPS]	0.28[11.02]	0.55[21.65]	0.83[32.68]	1.10[43.31]
Electrical Time Constant*	MSEC	0.30	0.30	0.30	0.30

Parallel Connected Coils	Units	1500-1	1500-2	1500-3	1500-4
Force Constant	LBS[N]/AMP	1.4[6.23]	2.8[12.46]	4.2[18.68]	5.5[24.47]
Continuous Force	LBS[N]	9.0[40.03]	18.1[80.51]	27.0[120.10]	36.0[160.14]
Continuous Current**	AMPS	6.6	6.6	6.6	6.6
Continuous Power at 125°C	WATTS	103.0	206.3	310.0	4130
Peak Force	LBS[N]	28.7[127.66]	57.4[255.33]	86.0[382.55]	114.0[507.10]
Peak Current	AMPS	20.87	20.87	20.87	20.87
Peak Power at 125°C	WATTS	1032.0	2063.0	3100.0	41260
Coil Resistance* at 25°C at Motor	OHMS	2.55	5.10	7.65	10.20
Phase Resistance* at 25°C in Delta	OHMS	1.70	3.40	5.10	6.80
Coil Resistance* at max operating temp at Coil	OHMS	3.55	7.10	10.66	14.21
Phase Resistance* at max operating temp in Delta	OHMS	2.37	4.74	7.10	9.47
Inductance at 1kHZ	mH	0.51	1.01	1.52	2.02
Back EMF Constant	V/IPS[V/MPS]	0.14[5.51]	0.28[11.02]	0.41[16.14]	0.55[21.65]
Electrical Time Constant*	MSEC	0.14	0.14	0.14	0.14

*These specifications reflect a 6-lead or delta connection coil with 1 foot of cable. A 6-lead motor has starts/finishes available at the cable end for control of each individual phase. Additional cable will increase resistance values.
**An appropriate heatsink is required to dissipate the continuous power generated by the motor coil, thus maintaining the coil assembly at or below the maximum specified operating temperature. Consult the Compumotor applications manual for more detail on thermal management.
***Magnet track weight specified for 1500-LMDTmodel. Lightweight magnet tracks are available. Please consult with your local representative or Compumotor for more information.
****Without Hall Effect Device

Custom Designed Servo Motors For Your Specific Application. Call 1-800-358-9070 Today.

1500 Series Magnet Track

Customer will also have 1/4-28UNF-2B holes in the bottom for mounting.

Consult factory for specific mounting patterns for different magnet track lengths.

Note: Labels are placed on non-flat side of track.

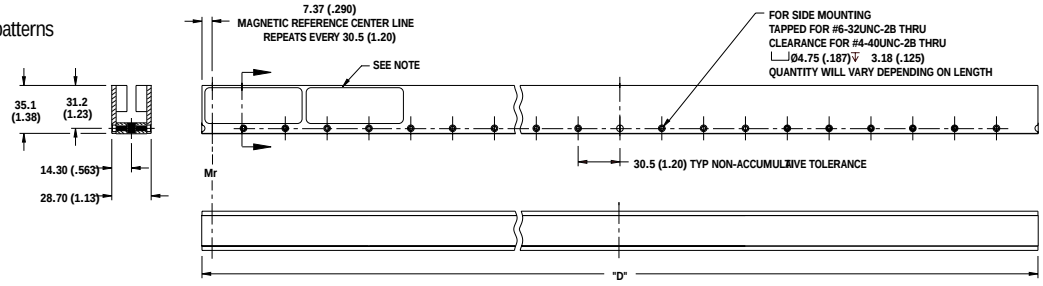

1500 Series Coil

Coil Length	"L" in / mm	"N" # of Holes	"B" in / mm
1	3.6 / 91.4	4	2.41 / 61.2
2	6.0 / 152.4	6	4.81 / 122.2
3	8.4 / 213.4	8	7.21 / 183.1
4	10.8 / 274.3	10	9.61 / 244.1

Travel distance (no vertical obstruction) = Magnet track length ("D") – Coil length ("B")

Travel distance (with vertical obstruction) = Magnet track length ("D") – (Coil length ("L") + 2.0" Cable bend radius)

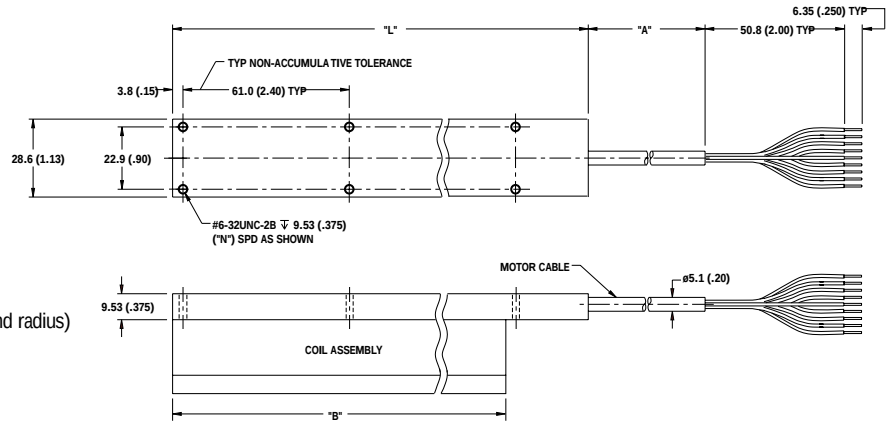

1500 Series Coil/120° HED

Coil Length	"L" in / mm	"N" # of Holes
1	3.9 / 99.1	4
2	6.3 / 160.0	6
3	8.7 / 221.0	8
4	11.1 / 281.9	10

Travel distance (no vertical obstruction) = Magnet track length ("D") – Coil length ("L")

Travel distance (with vertical obstruction) = Magnet track length ("D") – (Coil length ("L") + 2.0" Cable bend radius)

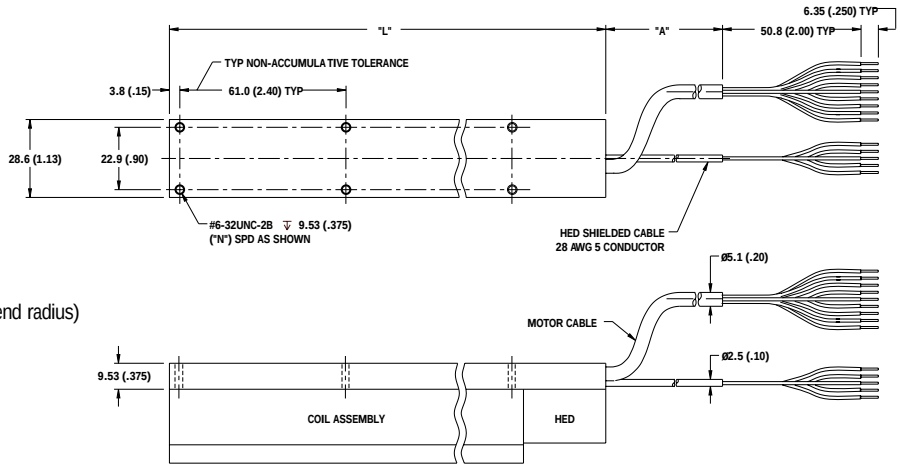

Motor/Hall Wiring

Hall Commutation	
SHLD	SHLD
BLK	GND
RED	+5VDC
GRN	W
BLUE	V
WHT	U

Care should be taken to center coil within the track as evenly as possible in all directions when mounting the magnet track and coil.

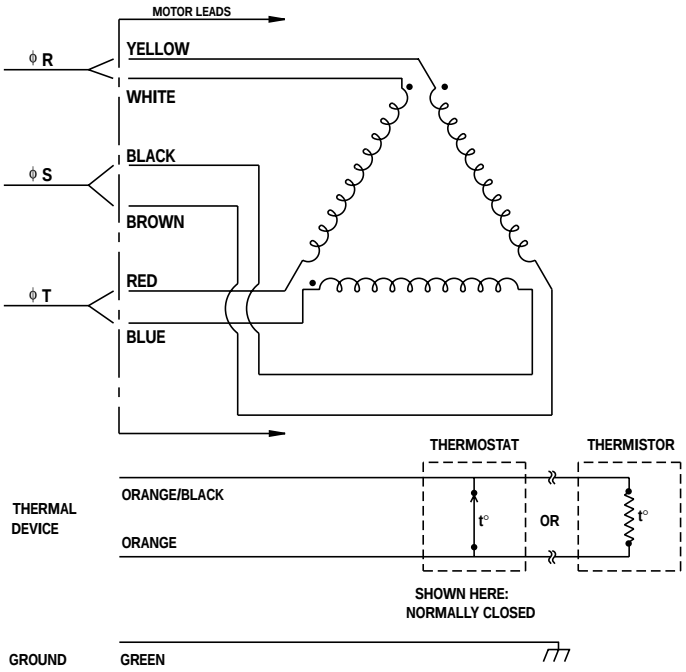

For Detailed Commutation, Consult Factory.

Additional Products

To meet all of your linear motion requirements, these additional products and linear system capabilities are available:

Custom Mounting Holes/Brackets
Clean Room Compatibility
Cable/Connector Options
Air Cooling
Water Cooling

Custom Designed Servo Motors For Your Specific Application. Call 1-800-358-9070 Today.

2000 Series Brushless Linear Servo Motor

2000 LMST Motor Data

	Units	2000-1	2000-2	2000-3	2000-4	2000-5
Coil Length	IN[mm]	2.4[61.0]	4.8[122.0]	7.2[182.9]	9.6[243.8]	12.0[305.0]
Bracket Length****	IN[mm]	3.2[81.3]	5.6[142.2]	8.0[203.2]	10.4[264.2]	12.8[325.1]
Coil Weight	LBS[Kg]	0.45[0.204]	0.85[0.386]	1.25[0.567]	1.65[0.748]	2.05[0.930]
Magnet Track Weight***	LBS/FT[N/cm]	11.0[1.61]	11.0[1.61]	11.0[1.61]	11.0[1.61]	11.0[1.61]
Max. Operating Temp	°C	125	125	125	125	125

Series Connected Coils	Units	2000-1	2000-2	2000-3	2000-4	2000-5
Force Constant	LBS[N]/AMP	2.8[12.45]	5.6[24.91]	8.4[37.36]	11.2[49.82]	14.0[62.27]
Continuous Force	LBS[N]	11.2[49.82]	22.4[96.64]	33.6[149.46]	44.8[199.28]	56.0[249.10]
Continuous Current**	AMPS	4.0	4.0	4.0	4.0	4.0
Continuous Power at 125°C	WATTS	84.40	168.79	253.19	337.59	421.99
Peak Force	LBS[N]	35.42[157.56]	70.84[315.11]	106.25[472.62]	144.67[643.52]	177.09[787.73]
Peak Current	AMPS	12.65	12.65	12.65	12.65	12.65
Peak Power at 125°C	WATTS	843.97	1687.94	2531.92	3375.89	4219.86
Coil Resistance* at 25°C at Motor	OHMS	5.68	11.36	17.04	22.72	28.40
Phase Resistance* at 25°C in Delta	OHMS	3.79	7.57	11.36	15.15	18.93
Coil Resistance* at max operating temp at Coil	OHMS	7.91	15.82	23.74	31.65	39.56
Phase Resistance* at max operating temp in Delta	OHMS	5.27	10.55	15.82	21.10	26.37
Inductance at 1kHZ	mH	1.19	2.38	3.57	4.76	5.95
Back EMF Constant	V/IPS[V/MPS]	0.32[12.60]	0.64[25.20]	0.97[38.19]	1.29[50.79]	1.61[63.39]
Electrical Time Constant*	MSEC	0.31	0.31	0.31	0.31	0.31

Parallel Connected Coils	Units	2000-1	2000-2	2000-3	2000-4	2000-5
Force Constant	LBS[N]/AMP	1.4[6.23]	2.8[12.45]	4.2[18.68]	5.6[24.91]	7.0[31.14]
Continuous Force	LBS[N]	11.2[49.82]	22.4[96.64]	33.6[149.46]	44.8[199.28]	56.0[249.10]
Continuous Current**	AMPS	8.0	8.0	8.0	8.0	8.0
Continuous Power at 125°C	WATTS	84.40	168.79	253.19	337.59	421.99
Peak Force	LBS[N]	35.42[157.56]	70.84[315.11]	106.25[472.62]	144.67[643.52]	177.09[787.73]
Peak Current	AMPS	25.3	25.3	25.3	25.3	25.3
Peak Power at 125°C	WATTS	843.97	1687.94	2531.92	3375.89	4219.86
Coil Resistance* at 25°C at Motor	OHMS	1.42	2.84	4.26	5.68	7.10
Phase Resistance* at 25°C in Delta	OHMS	0.95	1.89	2.84	3.79	4.73
Coil Resistance* at max operating temp at Coil	OHMS	1.98	3.96	5.93	7.91	9.89
Phase Resistance* at max operating temp in Delta	OHMS	1.32	2.64	3.96	5.27	6.59
Inductance at 1kHZ	mH	0.30	0.60	0.89	1.19	1.49
Back EMF Constant	V/IPS[V/MPS]	0.16[6.30]	0.32[12.60]	0.48[18.90]	0.64[25.20]	0.81[31.89]
Electrical Time Constant*	MSEC	0.15	0.15	0.15	0.15	0.15

*These specifications reflect a 6-lead or delta connection coil with 1 foot of cable. A 6-lead motor has starts/finishes available at the cable end for control of each individual phase. Additional cable will increase resistance values.
**An appropriate heatsink is required to dissipate the continuous power generated by the motor coil, thus maintaining the coil assembly at or below the maximum specified operating temperature. Consult the Compumotor applications manual for more detail on thermal management.
***Magnet track weight specified for 2000-LMST model. Lightweight magnet tracks are available. Please consult with your local representative or Compumotor for more information.
****Without Hall Effect Device

2000 LMDT Motor Data

	Units	2000-1	2000-2	2000-3	2000-4	2000-5
Coil Length	IN[mm]	2.4[61.0]	4.8[122.0]	7.2[182.9]	9.6[243.8]	12.0[305.0]
Bracket Length****	IN[mm]	3.2[81.3]	5.6[142.2]	8.0[203.2]	10.4[264.2]	12.8[325.1]
Coil Weight	LBS[Kg]	0.45[0.204]	0.85[0.386]	1.25[0.567]	1.65[0.748]	2.05[0.930]
Magnet Track Weight***	LBS/FT[N/cm]	11.0[1.61]	11.0[1.61]	11.0[1.61]	11.0[1.61]	11.0[1.61]
Max. Operating Temp	°C	125	125	125	125	125

Series Connected Coils	Units	2000-1	2000-2	2000-3	2000-4	2000-5
Force Constant	LBS[N]/AMP	4.0[17.79]	8.0[35.59]	12.0[53.38]	16.0[71.17]	20.0[88.96]
Continuous Force	LBS[N]	16.0[71.17]	32.0[142.34]	48.0[213.51]	64.0[284.68]	80.0[355.86]
Continuous Current**	AMPS	4.0	4.0	4.0	4.0	4.0
Continuous Power at 125°C	WATTS	84.40	168.79	253.19	337.59	421.99
Peak Force	LBS[N]	50.0[222.41]	101.0[449.27]	152.0[676.13]	202.0[898.54]	253.0[1125.39]
Peak Current	AMPS	12.65	12.65	12.65	12.65	12.65
Peak Power at 125°C	WATTS	843.97	1687.94	2531.92	3375.89	4219.86
Coil Resistance* at 25°C at Motor	OHMS	5.68	11.36	17.04	22.72	28.40
Phase Resistance* at 25°C in Delta	OHMS	3.79	7.57	11.36	15.15	18.93
Coil Resistance* at max operating temp at Coil	OHMS	7.91	15.82	23.74	31.65	39.56
Phase Resistance* at max operating temp in Delta	OHMS	5.27	10.55	15.82	21.10	26.37
Inductance at 1kHZ	mH	1.70	3.40	5.10	6.80	8.50
Back EMF Constant	V/IPS [V/MPS]	0.46[18.11]	0.92[36.22]	1.38[54.33]	1.84[72.44]	2.30[90.55]
Electrical Time Constant*	MSEC	0.45	0.45	0.45	0.45	0.45

Parallel Connected Coils	Units	2000-1	2000-2	2000-3	2000-4	2000-5
Force Constant	LBS[N]/AMP	2.0[8.90]	4.0[17.79]	6.0[26.69]	8.0[35.59]	10.0[44.48]
Continuous Force	LBS[N]	16.0[71.17]	32.0[142.34]	48.0[213.51]	64.0[284.68]	80.0[355.86]
Continuous Current**	AMPS	8.0	8.0	8.0	8.0	8.0
Continuous Power at 125°C	WATTS	84.40	168.79	253.19	337.59	421.99
Peak Force	LBS[N]	50.0[222.41]	101.0[449.27]	152.0[676.13]	202.0[898.54]	253.0[1125.39]
Peak Current	AMPS	25.3	25.3	25.3	25.3	25.3
Peak Power at 125°C	WATTS	843.97	1687.94	2531.92	3375.89	4219.86
Coil Resistance* at 25°C at Motor	OHMS	1.42	2.84	4.26	5.68	7.10
Phase Resistance* at 25°C in Delta	OHMS	0.95	1.89	2.84	3.79	4.73
Coil Resistance* at max operating temp at Coil	OHMS	1.98	3.96	5.93	7.91	9.89
Phase Resistance* at max operating temp in Delta	OHMS	1.32	2.64	3.96	5.27	6.59
Inductance at 1kHZ	mH	0.43	0.85	1.28	1.70	2.13
Back EMF Constant	V/IPS [V/MPS]	0.23[9.06]	0.46[18.11]	0.69[27.17]	0.92[36.22]	1.15[45.28]
Electrical Time Constant*	MSEC	0.21	0.21	0.21	0.21	0.21

*These specifications reflect a 6-lead or delta connection coil with 1 foot of cable. A 6-lead motor has starts/finishes available at the cable end for control of each individual phase. Additional cable will increase resistance values.
**An appropriate heatsink is required to dissipate the continuous power generated by the motor coil, thus maintaining the coil assembly at or below the maximum specified operating temperature. Consult the Compumotor applications manual for more detail on thermal management.
***Magnet track weight specified for 2000-LMDT model. Lightweight magnet tracks are available. Please consult with your local representative or Compumotor for more information.
****Without Hall Effect Device

Custom Designed Servo Motors For Your Specific Application. Call 1-800-358-9070 Today.

2000 Series Magnet Track

Customer will also have 1/4-28UNF-2B holes in the bottom for mounting.

Consult factory for specific mounting patterns for different magnet track lengths.

Note: Labels are placed on non-flat side of track.

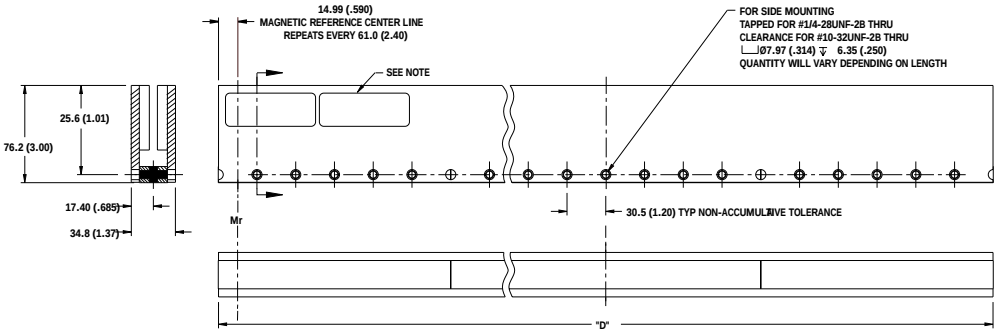

2000 Series Coil

Coil Length	"L" in / mm	"N" # of Holes	"B" in / mm
1	3.2 / 81.3	4	2.41 / 61.2
2	5.6 / 142.2	6	4.81 / 122.2
3	8.0 / 203.2	8	7.21 / 183.1
4	10.4 / 264.2	10	9.61 / 244.1
5	12.8 / 325.1	12	12.01 / 305.1

Travel distance (no vertical obstruction) = Magnet track length ("D") – Coil length ("B")

Travel distance (with vertical obstruction) = Magnet track length ("D") – (Coil length ("L") + 2.0" Cable bend radius)

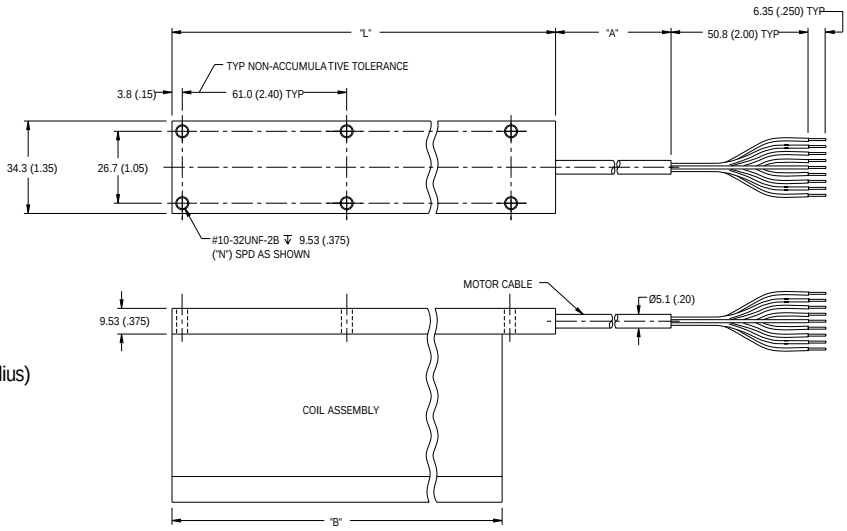

2000 Series Coil/120° HED

Coil Length	"L" in / mm	"N" # of Holes
1	4.69 / 119.1	4
2	7.09 / 180.1	6
3	9.49 / 241.0	8
4	11.89 / 302.0	10
5	14.29 / 363.0	12

Travel distance (no vertical obstruction) = Magnet track length ("D") – Coil length ("L")

Travel distance (with vertical obstruction) = Magnet track length ("D") – (Coil length ("L") + 2.0" Cable bend radius)

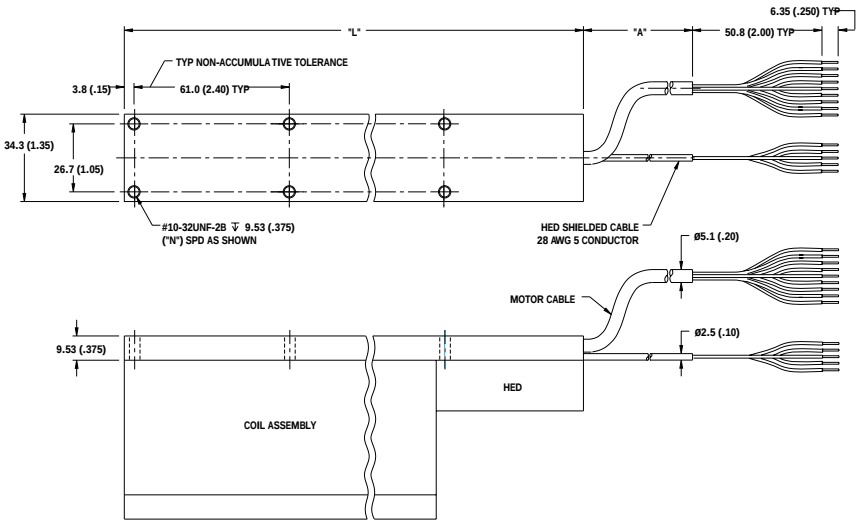

Motor/Hall Wiring

Hall Commutation	
SHLD	SHLD
BLK	GND
RED	+5VDC
GRN	W
BLUE	V
WHT	U

Care should be taken to center coil within the track as evenly as possible in all directions when mounting the magnet track and coil.

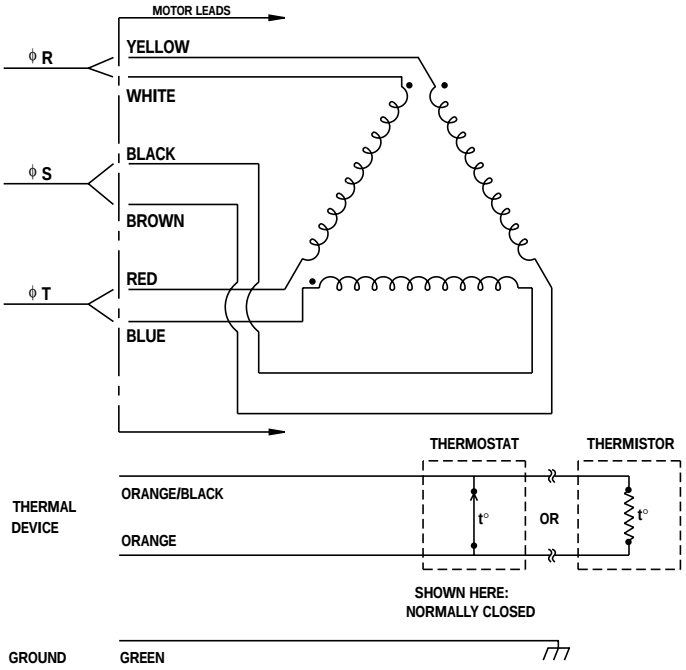

For Detailed Commutation, Consult Factory.

Additional Products

To meet all of your linear motion requirements, these additional products and linear system capabilities are available:

Custom Mounting Holes/Brackets
Clean Room Compatibility
Cable/Connector Options
Air Cooling
Water Cooling

Custom Designed Servo Motors For Your Specific Application. Call 1-800-358-9070 Today.