REVISION HISTORY			
REV	DESCRIPTION	DATE	APPROVED

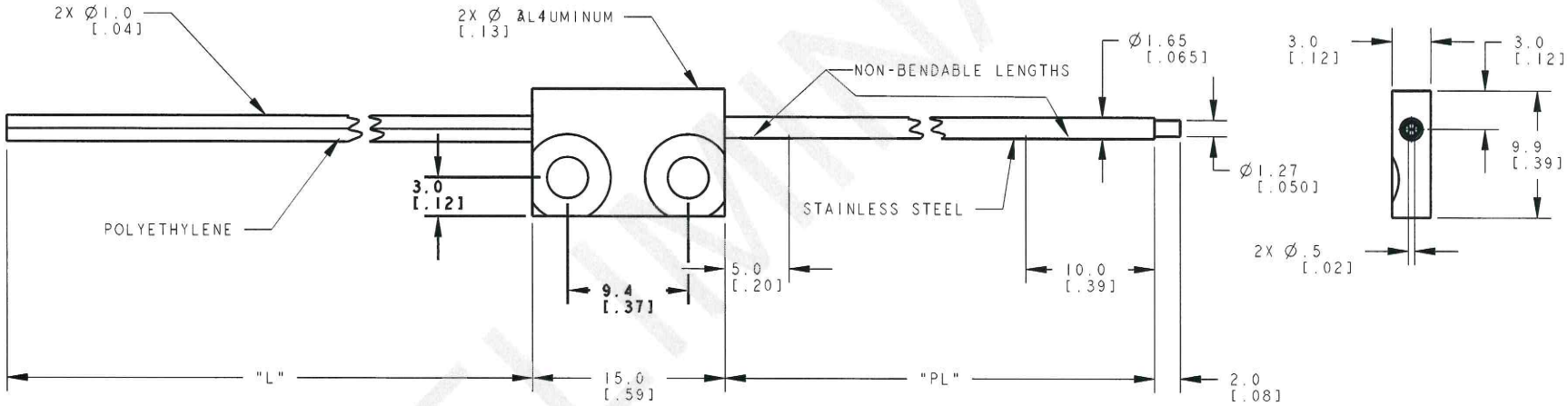

Accepted by: Sander van de Bor 12/18/25

MODEL NO.	"L"	"PL"	P/N
PBPF26UMBM3	2000 [79]	65 [2.5]	815443

Dimensions are
Millimeters [inches]
TOLERANCES
(Unless Otherwise Specified)
X = ±0.5mm
X.X = ±0.25
X.XX = ±0.12mm
[X.X = ±.1"]
[.XX = ±.01"]
[.XXX = ±.005"]
ANGLE = ±3°
"L" = 40mm/Meter
[.5"/Foot]

BANNER ENGINEERING Corp.
9717 10th Ave. North
Minneapolis, MN 55441
Tel # 763-544-3164
Fax # 763-544-3573
www.bannerengineering.com

This drawing is the property of BANNER ENGINEERING Corp. and is proprietary in general and in detail. Its contents shall not be revealed to outside parties without the written consent of BANNER.

PBPF26UMBM3 — PLASTIC FIBEROPTIC ASSEMBLY & MOD'S

08-04-23	1 OF 1	815443

PRELIMINARY