INSTALLATION INSTRUCTION

Switch fuses

OS600-800_S

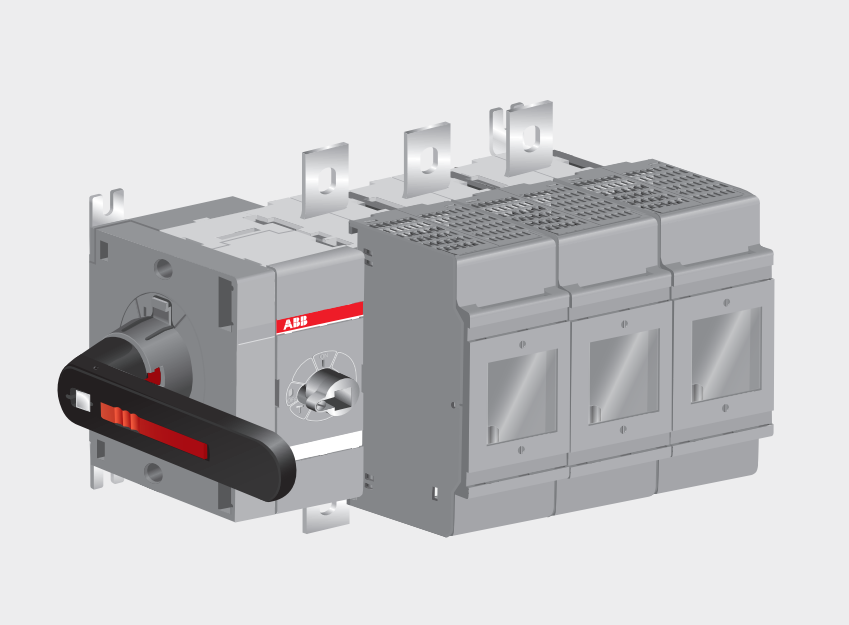

Table of contents

03	Installation
04	Labels Clearances per UL98
05	Terminal shrouds OSS_ Terminal clamps OZX_
06	Fuse links
07	Auxiliary contacts OA_
08	Fourth pole OSP_
09	Handles
10	Neutral link OS_N3 & OXN800_
11	Electronic fuse monitor OFS_
12	Module for aux contacts OEA28_
13	Fuse indicator DPMM_
14	Dimension drawings
15	Warning sheet

Installation

OS600-800_S_K

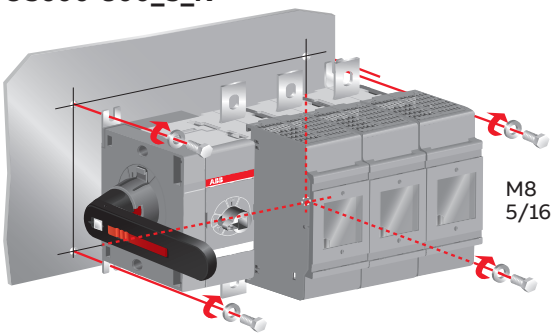

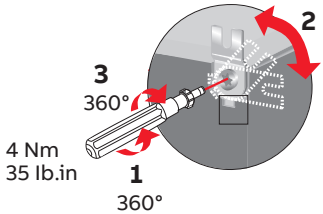

OS600-800_S_

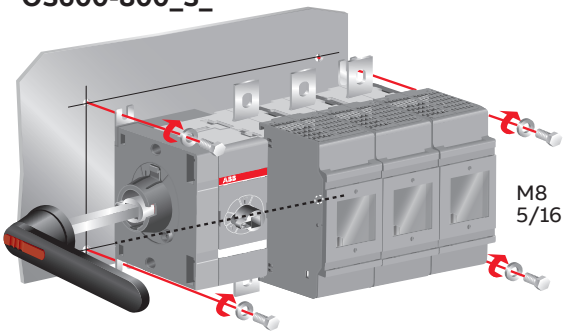

KA00204

Labels

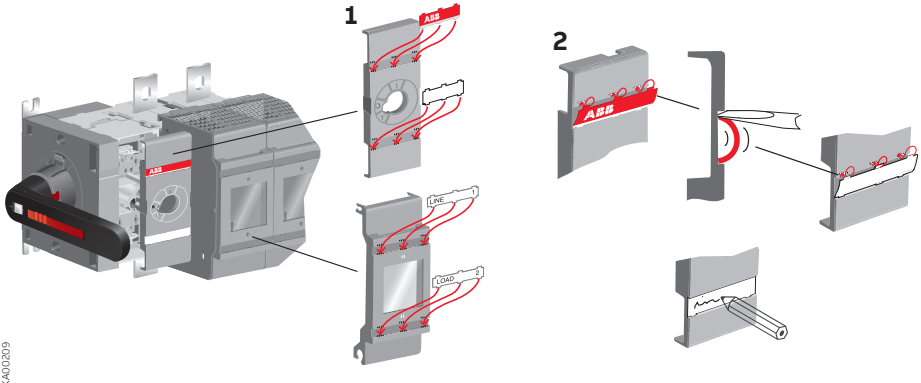

Clearances per UL98

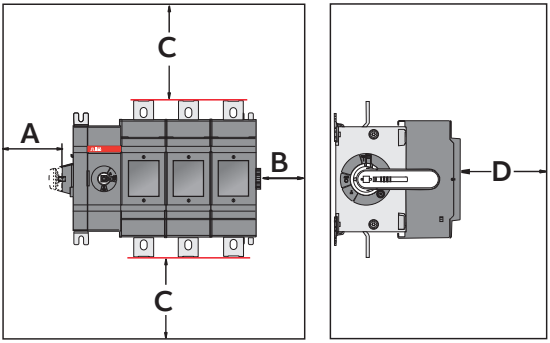

A	B	D
0	13 mm / 0.5 in	13 mm / 0.5 in

Minimum enclosure size or equivalent volume

Switch	Height	Width	Depth
OS600J	914 mm 36 in	610 mm 24 in	254 mm 10 in
OS800L	700 mm 27.5 in	900 mm 25.4 in	400 mm 15.7 in

Cable size

AWG	C
2	100 mm 4 in
1	100 mm 4 in
1/0	125 mm 5 in
2/0	150 mm 6 in
3/0-4/0	175 mm 7 in

MCM	C
250	200 mm 8 in
300	250 mm 10 in
350	300 mm 12 in
400	330 mm 13 in
500	356 mm 14 in
600	381 mm 15 in

Terminal shrouds
OSS_

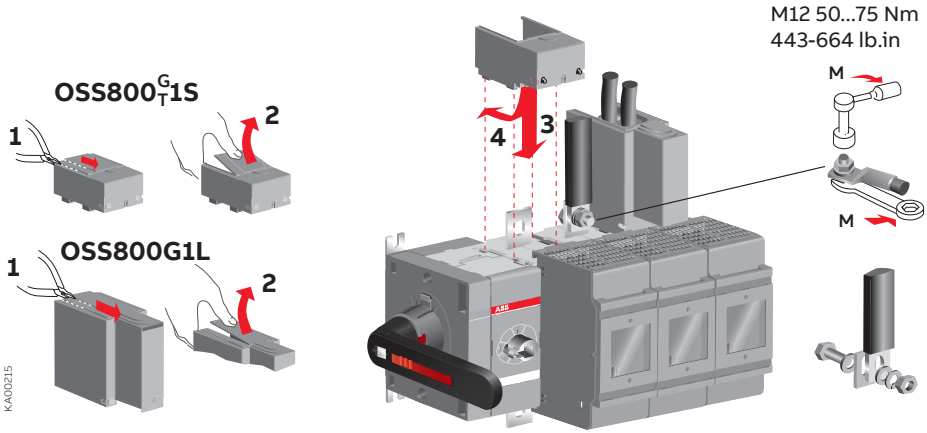

Terminal clamps
OZX_

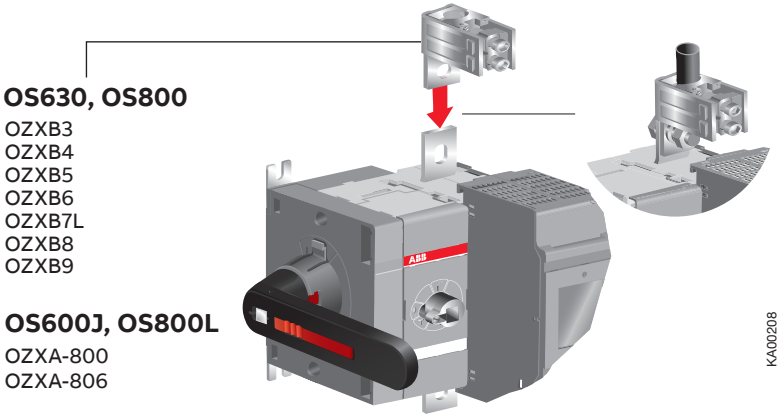

Fuse links

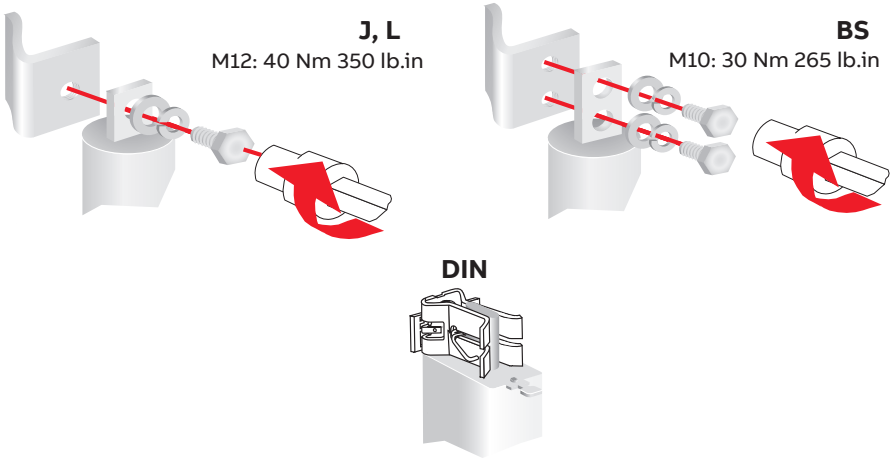

Auxiliary contacts
OA_

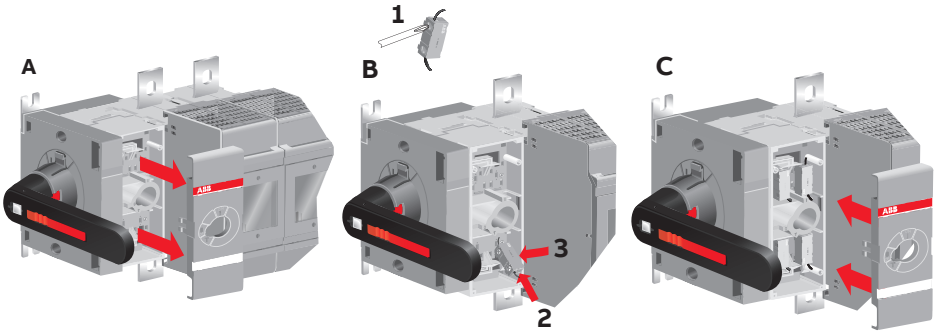

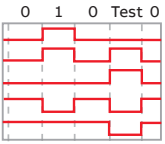

NO: OA1G10
NC: OA3G01

Test contact

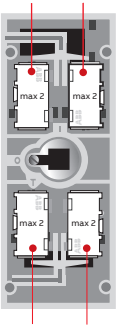

Test indication contact

Remove

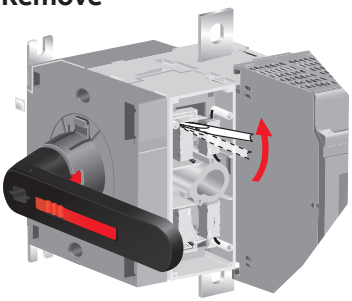

KA00218

Fourth pole
OSP_

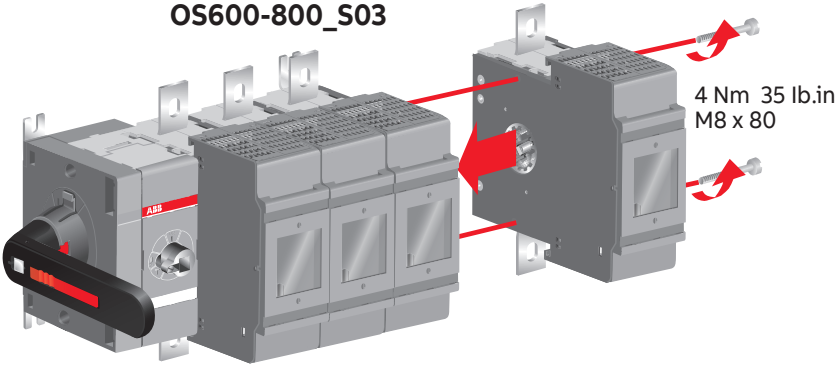

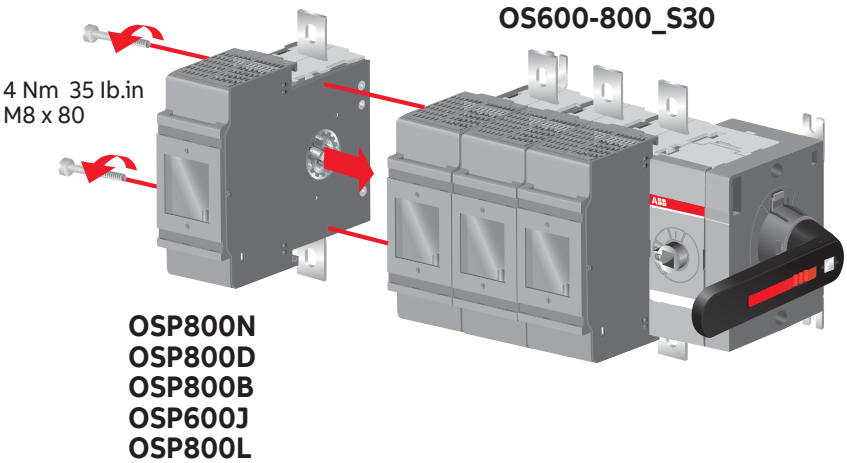

KA00210

Handles

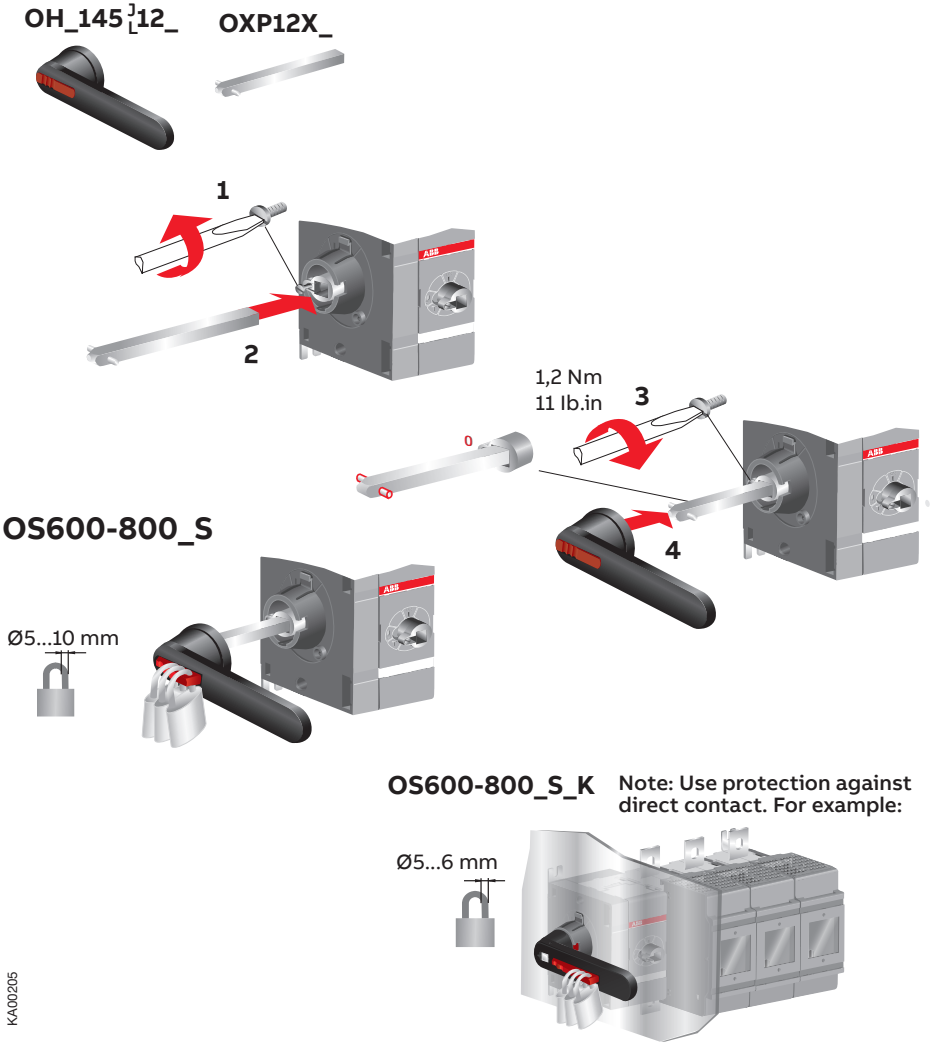
OH_145]L12_
OXP12X_
1
2
1,2 Nm
11 lb.in
3
0
4
OS600-800_S
Ø5...10 mm
OS600-800_S_K
Note: Use protection against direct contact. For example:
Ø5...6 mm
KA00205

Neutral link

OS_N3 & OXN800_

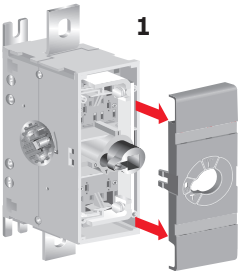

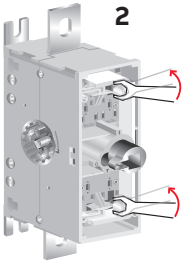

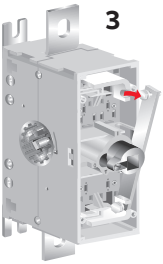

or

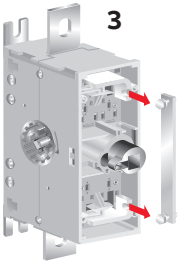

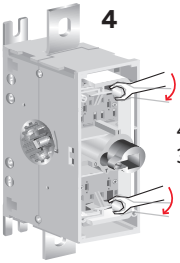

KA00216

Electronic fuse monitor
OFS_

OS600-800...+OFS_

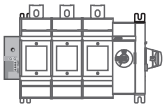

Note: Mounting directly on switch-fuse is possible only on OS__S30 and S40 types.

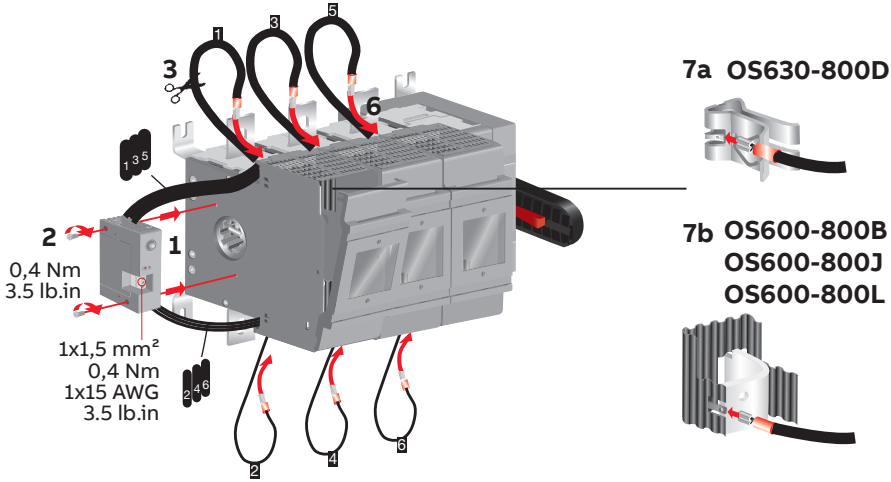

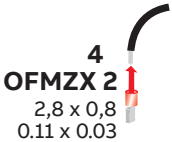

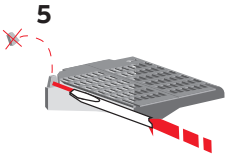

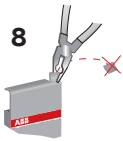

KA0214

Module for aux contacts
OEA28_

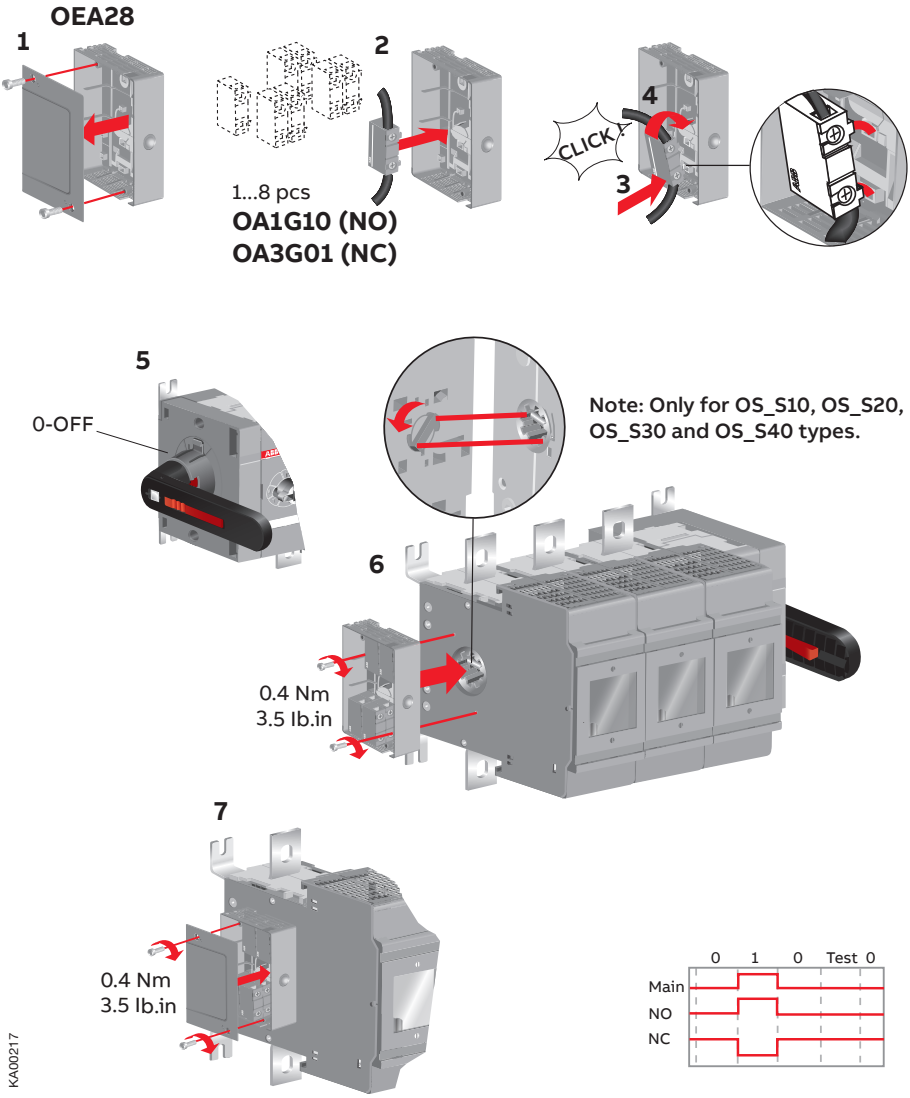

Fuse indicator
DPMM_

OS630-800_S + DPMM_

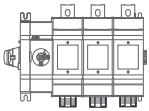

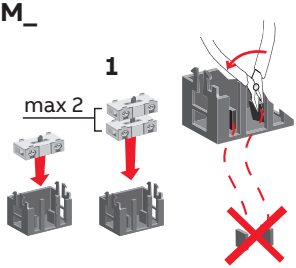

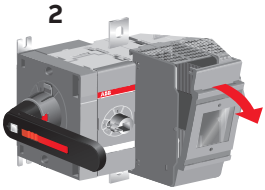

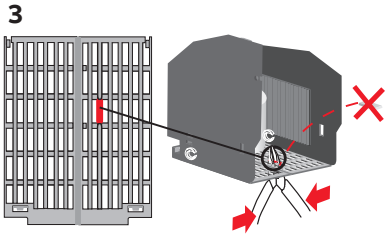

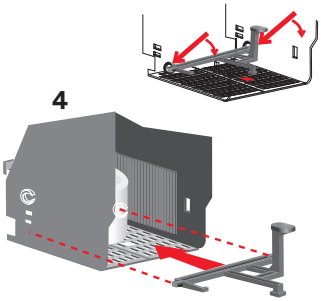

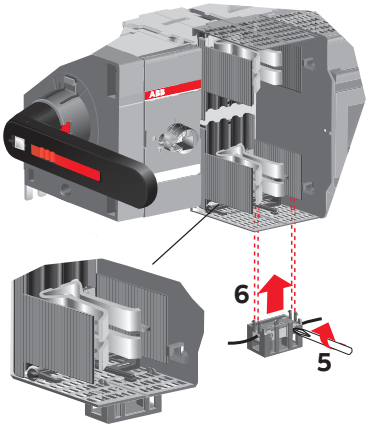

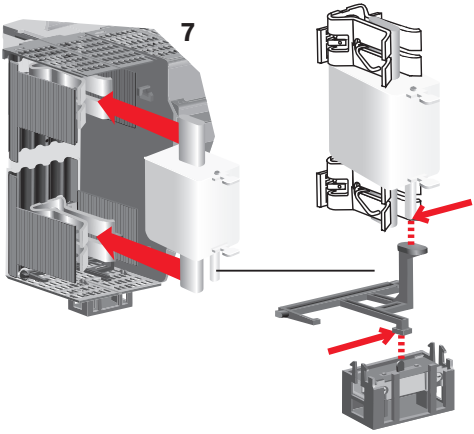

KA0212

Dimension drawings

OS600-800_S

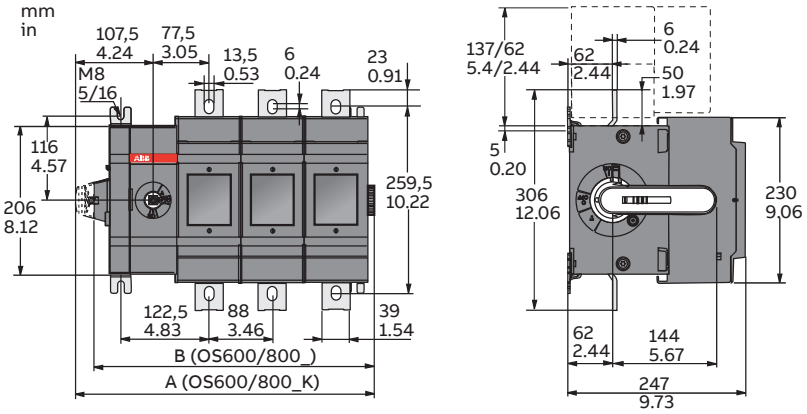

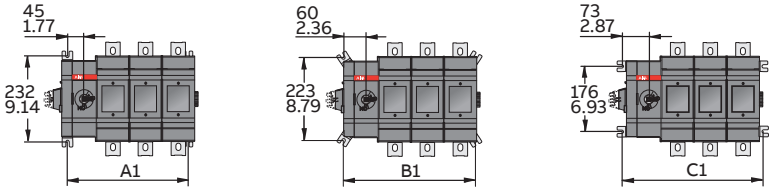

M00146/OS600-800_S01_-04_ C / KA00364

mm	OS600/630/800_, OS600/630/800_K			
in	DS/BS/JS/LS01	DS/BS/JS/LS02	DS/BS/JS/LS03	DS/BS/JS/LS04
A	238/9.38	326/12.84	414/16.31	502/19.78
B	213/8.39	301/11.86	389/15.32	477/18.79
A1	147,5/5.81	235,5/9.28	323,5/12.75	411,5/16.21
B1	177,5/6.99	265,5/10.46	353,5/13.93	441,5/17.39
C1	203,5/8.02	291,5/11.48	279,5/14.95	467,5/18.42

BG Внимание! Опасно напрежение! Да се монтира само от лице с електротехническа квалификация.
CN 警告！电压危险！只能由专业电工进行安装。
CZ Varování! Nebezpečné napětí! Montáž smí provádět výhradně elektrotechnik!
DA Advarsel! Farlig elektrisk spænding! Installation må kun foretages af personer med elektroteknisk ekspertise.
DE Warnung! Gefährliche Spannung! Installation nur durch elektrotechnische Fachkraft.
EL Προειδοποίηση! Υψηλή τάση! Η εγκατάσταση πρέπει να γίνεται μόνο από εξειδικευμένους ηλεκτροτεχνικούς.
EN Warning! Hazardous voltage! Installation by person with electrotechnical expertise only.
ES ¡Advertencia! ¡Tensión peligrosa! La instalación deberá ser realizada únicamente por electricistas especializados.
ET Hoiatus! Ohtlik pinge. Paigaldada võib ainult elektrotehnika-alane ekspert.
FI Varoitus! Vaarallinen jännite! Asennuksen voi tehdä vain sähköalan ammattihenkilö.
FR Avertissement! Tension électrique dangereuse! Installation uniquement par des personnes qualifiées en électrotechnique.
HR Upozorenje! Opasan napon! Postavljati smije samo elektrotehnički stručnjak.
HU Figyelmeztetés! Veszélyes feszültség! Csak elektrotechnikai tapasztalattal rendelkező szakember helyezheti üzembe.
IE Rabhadh! Voltas guaiseach! Ba chóir do dhuine ag a bhfuil saineolas leictriteicniúil, agus an té sin amháin, é seo a shuiteáil.
IT Avvertenza! Tensione pericolosa! Fare installare solo da un elettricista qualificato.
LT Dėmesio! Pavojinga įtampa! Dirbti leidžiama tik elektrotechniko patirties turintiems asmenims.
LV Uzmanību! Bīstami - elektrība! Montāžas darbus drīkst veikt tikai personas, kurām ir atbilstošas elektrotehniskās zināšanas.
MT Twissija! Vultaġġ perikoluż! Għandu jiġi installat biss minn persuna b'kompetenza elettroteknika.
NL Waarschuwing! Gevaarlijke spanning! Mag alleen geïnstalleerd worden door een deskundige elektrotechnicus.
NO Advarsel! Farlig spenning! Montering skal kun utføres av kvalifiserte personer med elektrokompetanse.
PL Ostrzeżenie! Niebezpieczne napięcie! Instalacji może dokonać wyłącznie osoba z fachową wiedzą w dziedzinie elektrotechniki.
PT Aviso! Tensão perigosa! A instalação só deve ser realizada por um eletricista especializado.
RO Avertizare! Tensiune periculoasă! Instalarea trebuie efectuată numai de către o persoană cu experiență în electrotehnică.
RU Осторожно! Опасное напряжение! Монтаж должен выполняться только специалистом-электриком.
SE Varning! Farlig spänning! Installation får endast utföras av en elektriker.
SK Varovanie! Nebezpečné napätie! Montáž môže vykonávať iba skúsený elektrotechnik.
SL Opozorilo! Nevarna napetost! Vgradnjo lahko opravi le oseba z elektrotehničnim strokovnim znanjem.

Contact us

ABB Oy
P.O. Box 622
FI-65101 Vaasa
Finland

abb.com/lowvoltage

© Copyright 2018 ABB. All rights reserved.
Specifications subject to change without notice.

34 OS600-800_S rev. F / 1SCC311025M0204 # 15.10.2020